This electronic collection of documents is provided for the convenience of the user and is Not a Certified Document –

The documents contained herein were originally issued and sealed by the individuals whose names and license numbers appear on each page, on the dates appearing with their signature on that page.
This file or an individual page shall not be considered a certified document.

09/08/99

TIP PROJECT: 44614

See Sheet 1-A For Index of Sheets
See Sheet 1-B For Conventional Symbols

STATE OF NORTH CAROLINA
DIVISION OF HIGHWAYS

WASHINGTON COUNTY

STATE	STATE PROJECT REFERENCE NO.	SHEET NO.	TOTAL SHEETS
N.C.	44614	1	

STATE PROJ. NO.	F.A. PROJ. NO.	DESCRIPTION
44614	STATE FUNDED	PE
44614	STATE FUNDED	R/W
44614	STATE FUNDED	CONSTRUCTION

LOCATION: BRIDGE NO. 26 ON SR 1155 OVER THE SCUPPERNONG RIVER

TYPE OF WORK: GRADING, PAVING, DRAINAGE, AND STRUCTURE

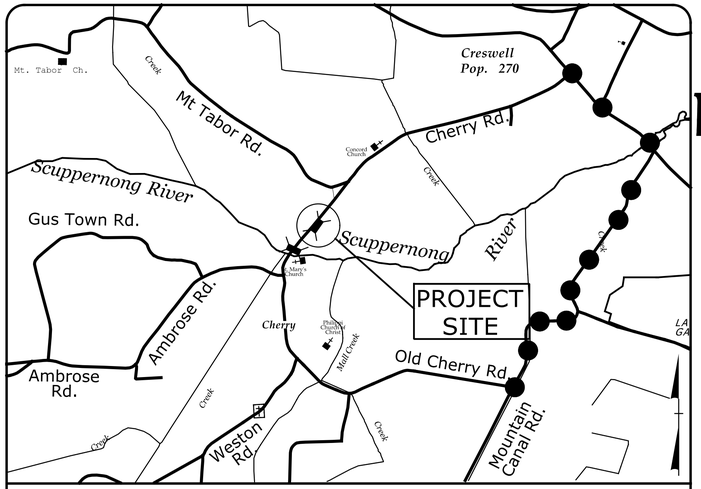

VICINITY MAP
NOT TO SCALE

OFF SITE DETOUR

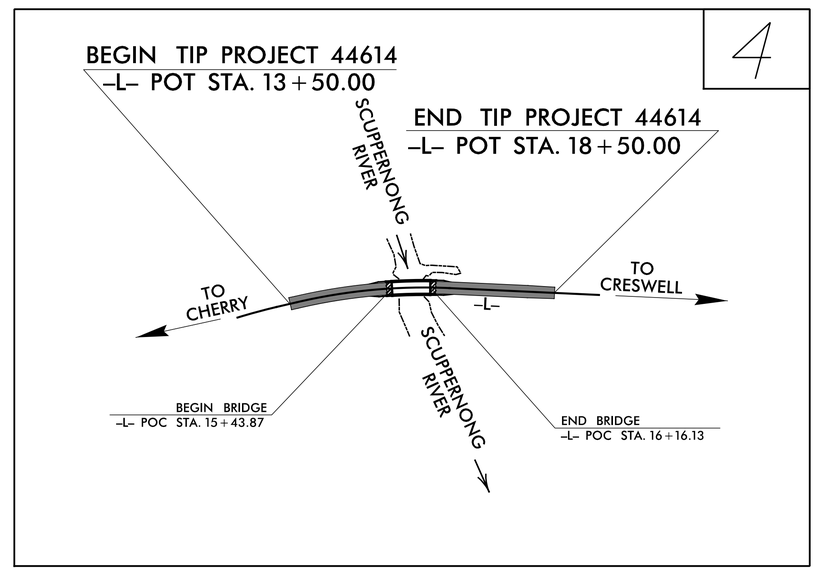

DOCUMENT NOT CONSIDERED FINAL
UNLESS ALL SIGNATURES COMPLETED

CONTRACT:

GRAPHIC SCALES

50 25 0 50 100
PLANS

50 25 0 50 100
PROFILE (HORIZONTAL)

10 5 0 10 20
PROFILE (VERTICAL)

DESIGN DATA

ADT 2017 = 900
ADT 2037 = 1625
K = X %
D = XX %
T = XX % *
V = 40 MPH
* TTST =XX% DUAL XX%
FUNC CLASS =
MINOR COLLECTOR
SUBREGIONAL TIER

PROJECT LENGTH

LENGTH ROADWAY TIP PROJECT 44614	=	0.081 MI.
LENGTH STRUCTURE TIP PROJECT 44614	=	0.014 MI.
TOTAL LENGTH OF TIP PROJECT 44614	=	0.095 MI.

Prepared for the North Carolina Department of Transportation
In the Office of:

vhb
940 Main Campus Drive, Suite 500
Raleigh, NC 27606
NC License No. C-3705

SUNGATE DESIGN GROUP, P.A.
915 JONES FRANKLIN ROAD
RALEIGH, NORTH CAROLINA 27606
TEL (919) 859-2243 FAX (919) 859-4256
BOQ PRIME LICENSE NO. C-0910

2018 STANDARD SPECIFICATIONS

RIGHT OF WAY DATE:
May 8, 2017

LETTING DATE:
May 02, 2018

NCDOT CONTACT

TIM GOINS, PE
PROJECT ENGINEER

JERRY JAVELLANA, PE
PROJECT DESIGN ENGINEER

JOHN ABEL, PE
PROJECT ENGINEER-ROADWAY DESIGN

HYDRAULICS ENGINEER

2/14/2018

DocuSigned by:
Joshua G. Dalton
1089ADBC14994C3...
P.E.
SIGNATURE:

NORTH CAROLINA PROFESSIONAL SEAL 26971 ENGINEER JOSHUA G. DALTON

ROADWAY DESIGN ENGINEER

NORTH CAROLINA PROFESSIONAL SEAL 037874 ENGINEER JEFFREY D. GOINS

P.E.
SIGNATURE:

STATE OF NORTH CAROLINA DEPARTMENT OF TRANSPORTATION

2/14/2018
44614_rdy_tsh.dgn
emumpasi

PROJECT REFERENCE NO.	SHEET NO.
44614	1A

ROADWAY DESIGN ENGINEER

Prepared by
vhb
940 Main Campus Drive, Suite 500
Raleigh, NC 27606
NC License No. C-3705

NORTH CAROLINA PROFESSIONAL SEAL 037874 ENGINEER TIMOTHY D. GOINS

INDEX OF SHEETS

SHEET NUMBER	SHEET
1	TITLE SHEET
1A	INDEX OF SHEETS, GENERAL NOTES, AND STANDARD DRAWINGS
1B	CONVENTIONAL SYMBOLS
2A-1	PAVEMENT SCHEDULE AND TYPICAL SECTIONS
2C-1	SPECIAL DETAILS
2C-2	MODIFIED CONCRETE FLUME DETAIL
3B-1	SUMMARY OF EARTHWORK, REMOVAL OF EXISTING ASPHALT PAVEMENT, DRAINAGE SUMMARY, GUARDRAIL SUMMARY
4	PLAN SHEET
5	PROFILE SHEET
TMP-1 THRU TMP-3	TRANSPORTATION MANAGEMENT PLANS
PMP-1 THRU PMP-2	PAVEMENT MARKING PLANS
EC-1 THRU EC-3	EROSION CONTROL PLANS
SIGN-1 THRU SIGN-2	SIGNING PLANS
X-1A	CROSS-SECTION SUMMARY SHEET
X-1 THRU X-3	CROSS-SECTIONS
S-1 THRU S-14	STRUCTURE PLANS

2018 ROADWAY ENGLISH STANDARD DRAWINGS EFF. 01-16-2018
REV.

The following Roadway Standards as appear in "Roadway Standard Drawings" Highway Design Branch - N. C. Department of Transportation - Raleigh, N. C., Dated January, 2018 are applicable to this project and by reference hereby are considered a part of these plans:

STD.NO.	TITLE
DIVISION 2 - EARTHWORK	
200.02	Method of Clearing - Method II
225.02	Guide for Grading Subgrade - Secondary and Local
225.04	Method of Obtaining Superelevation - Two Lane Pavement
DIVISION 3 - PIPE CULVERTS	
300.01	Method of Pipe Installation
310.10	Driveway Pipe Construction
DIVISION 4 - MAJOR STRUCTURES	
422.01	Bridge Approach Fills - Type I Standard Approach Fill
DIVISION 5 - SUBGRADE, BASES AND SHOULDERS	
560.01	Method of Shoulder Construction - High Side of Superelevated Curve - Method I
DIVISION 8 - INCIDENTALS	
806.01	Concrete Right-of-Way Marker
806.02	Granite Right-of-Way Marker
840.00	Concrete Base Pad for Drainage Structures
862.01	Guardrail Placement
862.02	Guardrail Installation
862.03	Structure Anchor Units (Special Detail for Type III Anchor Units Sheets 1 of 7 and 2 of 7)
876.01	Rip Rap in Channels
876.02	Guide for Rip Rap at Pipe Outlets

GENERAL NOTES:

2018 SPECIFICATIONS
EFFECTIVE: 01-16-2018
REVISED:

GRADING AND SURFACING OR RESURFACING AND WIDENING:

THE GRADE LINES SHOWN DENOTE THE FINISHED ELEVATION OF THE PROPOSED SURFACING AT GRADE POINTS SHOWN ON THE TYPICAL SECTIONS. WHERE NO GRADE LINES ARE SHOWN, THE PROFILES SHOWN DENOTE THE TOP ELEVATION OF THE EXISTING PAVEMENT ALONG THE CENTER LINE OF SURVEY ON WHICH THE PROPOSED RESURFACING WILL BE PLACED. GRADE LINES MAY BE ADJUSTED BY THE ENGINEER IN ORDER TO SECURE A PROPER TIE-IN.

CLEARING:

CLEARING ON THIS PROJECT SHALL BE PERFORMED TO THE LIMITS ESTABLISHED BY METHOD II.

SUPERELEVATION:

ALL CURVES ON THIS PROJECT SHALL BE SUPERELEVATED IN ACCORDANCE WITH STD. NO. 225.04 USING THE RATE OF SUPERELEVATION AND RUNOFF SHOWN ON THE PLANS. SUPERELEVATION IS TO BE REVOLVED ABOUT THE GRADE POINTS SHOWN ON THE TYPICAL SECTIONS.

SHOULDER CONSTRUCTION:

ASPHALT, EARTH, AND CONCRETE SHOULDER CONSTRUCTION ON THE HIGH SIDE OF SUPERELEVATED CURVES SHALL BE IN ACCORDANCE WITH STD. NO. 560.01

SIDE ROADS:

THE CONTRACTOR WILL BE REQUIRED TO DO ALL NECESSARY WORK TO PROVIDE SUITABLE CONNECTIONS WITH ALL ROADS, STREETS, AND DRIVES ENTERING THIS PROJECT. THIS WORK WILL BE PAID FOR AT THE CONTRACT UNIT PRICE FOR THE PARTICULAR ITEMS INVOLVED.

GUARDRAIL:

THE GUARDRAIL LOCATIONS SHOWN ON THE PLANS MAY BE ADJUSTED DURING CONSTRUCTION AS DIRECTED BY THE ENGINEER. THE CONTRACTOR SHOULD CONSULT WITH THE ENGINEER PRIOR TO ORDERING GUARDRAIL MATERIAL.

TEMPORARY SHORING:

SHORING REQUIRED FOR THE MAINTENANCE OF TRAFFIC WILL BE PAID FOR AS "EXTRA WORK" IN ACCORDANCE WITH SECTION 104-7.

SUBSURFACE PLANS:

NO SUBSURFACE PLANS ARE AVAILABLE ON THIS PROJECT. THE CONTRACTOR SHOULD MAKE HIS OWN INVESTIGATION AS TO THE SUBSURFACE CONDITIONS.

END BENTS:

THE ENGINEER SHALL CHECK THE STRUCTURE END BENT PLANS, DETAILS, AND CROSS-SECTION PRIOR TO SETTING OF THE SLOPE STAKES FOR THE EMBANKMENT OR EXCAVATION APPROACHING A BRIDGE.

UTILITIES:

UTILITY OWNERS ON THIS PROJECT ARE

CenturyLink - Communications

Washington County Water - Water

Dominion Power - Distribution

ANY RELOCATION OF EXISTING UTILITIES WILL BE ACCOMPLISHED BY OTHERS.

RIGHT-OF-WAY MARKERS:

ALL RIGHT-OF-WAY MARKERS ON THIS PROJECT SHALL BE PLACED BY CONTRACT.

04/06/15

PROJECT REFERENCE NO.	SHEET NO.
44614	1-B

STATE OF NORTH CAROLINA, DIVISION OF HIGHWAYS

CONVENTIONAL PLAN SHEET SYMBOLS

Note: Not to Scale **S.U.E. = Subsurface Utility Engineering*

BOUNDARIES AND PROPERTY:

- State Line
- County Line
- Township Line
- City Line
- Reservation Line
- Property Line
- Existing Iron Pin — EIP
- Property Corner
- Property Monument — ECM
- Parcel/Sequence Number — 123
- Existing Fence Line
- Proposed Woven Wire Fence
- Proposed Chain Link Fence
- Proposed Barbed Wire Fence
- Existing Wetland Boundary — WLB
- Proposed Wetland Boundary — WLB
- Existing Endangered Animal Boundary — EAB
- Existing Endangered Plant Boundary — EPB
- Existing Historic Property Boundary — HPB
- Known Contamination Area: Soil
- Potential Contamination Area: Soil
- Known Contamination Area: Water
- Potential Contamination Area: Water
- Contaminated Site: Known or Potential

BUILDINGS AND OTHER CULTURE:

- Gas Pump Vent or U/G Tank Cap
- Sign — S
- Well — W
- Small Mine
- Foundation
- Area Outline
- Cemetery
- Building
- School
- Church
- Dam

HYDROLOGY:

- Stream or Body of Water
- Hydro, Pool or Reservoir
- Jurisdictional Stream — JS
- Buffer Zone 1 — BZ 1
- Buffer Zone 2 — BZ 2
- Flow Arrow
- Disappearing Stream
- Spring
- Wetland
- Proposed Lateral, Tail, Head Ditch — FLOW
- False Sump

RAILROADS:

- Standard Gauge — CSX TRANSPORTATION
- RR Signal Milepost — MILEPOST 35
- Switch — SWITCH
- RR Abandoned
- RR Dismantled

RIGHT OF WAY:

- Baseline Control Point
- Existing Right of Way Marker
- Existing Right of Way Line
- Proposed Right of Way Line — RW
- Proposed Right of Way Line with Iron Pin and Cap Marker — RW
- Proposed Right of Way Line with Concrete or Granite R/W Marker — RW
- Proposed Control of Access Line with Concrete C/A Marker — CA
- Existing Control of Access — CA
- Proposed Control of Access — CA
- Existing Easement Line — E
- Proposed Temporary Construction Easement — E
- Proposed Temporary Drainage Easement — TDE
- Proposed Permanent Drainage Easement — PDE
- Proposed Permanent Drainage / Utility Easement — DUE
- Proposed Permanent Utility Easement — PUE
- Proposed Temporary Utility Easement — TUE
- Proposed Aerial Utility Easement — AUE
- Proposed Permanent Easement with Iron Pin and Cap Marker

ROADS AND RELATED FEATURES:

- Existing Edge of Pavement
- Existing Curb
- Proposed Slope Stakes Cut — C
- Proposed Slope Stakes Fill — F
- Proposed Curb Ramp — CR
- Existing Metal Guardrail
- Proposed Guardrail
- Existing Cable Guiderail
- Proposed Cable Guiderail
- Equality Symbol
- Pavement Removal

VEGETATION:

- Single Tree
- Single Shrub
- Hedge
- Woods Line
- Orchard
- Vineyard — Vineyard

EXISTING STRUCTURES:

MAJOR:

- Bridge, Tunnel or Box Culvert — CONC
- Bridge Wing Wall, Head Wall and End Wall — CONC WW

MINOR:

- Head and End Wall — CONC HW
- Pipe Culvert
- Footbridge
- Drainage Box: Catch Basin, DI or JB — CB
- Paved Ditch Gutter
- Storm Sewer Manhole — S
- Storm Sewer — S

UTILITIES:

POWER:

- Existing Power Pole
- Proposed Power Pole
- Existing Joint Use Pole
- Proposed Joint Use Pole
- Power Manhole — P
- Power Line Tower
- Power Transformer
- U/G Power Cable Hand Hole
- H-Frame Pole
- U/G Power Line LOS B (S.U.E.*) — P
- U/G Power Line LOS C (S.U.E.*) — P
- U/G Power Line LOS D (S.U.E.*) — P

TELEPHONE:

- Existing Telephone Pole
- Proposed Telephone Pole
- Telephone Manhole — T
- Telephone Pedestal — T
- Telephone Cell Tower
- U/G Telephone Cable Hand Hole — HH
- U/G Telephone Cable LOS B (S.U.E.*) — T
- U/G Telephone Cable LOS C (S.U.E.*) — T
- U/G Telephone Cable LOS D (S.U.E.*) — T
- U/G Telephone Conduit LOS B (S.U.E.*) — TC
- U/G Telephone Conduit LOS C (S.U.E.*) — TC
- U/G Telephone Conduit LOS D (S.U.E.*) — TC
- U/G Fiber Optics Cable LOS B (S.U.E.*) — T FO
- U/G Fiber Optics Cable LOS C (S.U.E.*) — T FO
- U/G Fiber Optics Cable LOS D (S.U.E.*) — T FO

WATER:

- Water Manhole — W
- Water Meter
- Water Valve
- Water Hydrant
- U/G Water Line LOS B (S.U.E*) — W
- U/G Water Line LOS C (S.U.E*) — W
- U/G Water Line LOS D (S.U.E*) — W
- Above Ground Water Line — A/G Water

TV:

- TV Pedestal — C
- TV Tower
- U/G TV Cable Hand Hole — HH
- U/G TV Cable LOS B (S.U.E.*) — TV
- U/G TV Cable LOS C (S.U.E.*) — TV
- U/G TV Cable LOS D (S.U.E.*) — TV
- U/G Fiber Optic Cable LOS B (S.U.E.*) — TV FO
- U/G Fiber Optic Cable LOS C (S.U.E.*) — TV FO
- U/G Fiber Optic Cable LOS D (S.U.E.*) — TV FO

GAS:

- Gas Valve
- Gas Meter
- U/G Gas Line LOS B (S.U.E.*) — G
- U/G Gas Line LOS C (S.U.E.*) — G
- U/G Gas Line LOS D (S.U.E.*) — G
- Above Ground Gas Line — A/G Gas

SANITARY SEWER:

- Sanitary Sewer Manhole
- Sanitary Sewer Cleanout
- U/G Sanitary Sewer Line — SS
- Above Ground Sanitary Sewer — A/G Sanitary Sewer
- SS Forced Main Line LOS B (S.U.E.*) — FSS
- SS Forced Main Line LOS C (S.U.E.*) — FSS
- SS Forced Main Line LOS D (S.U.E.*) — FSS

MISCELLANEOUS:

- Utility Pole
- Utility Pole with Base
- Utility Located Object
- Utility Traffic Signal Box — S
- Utility Unknown U/G Line LOS B (S.U.E.*) — ?UTL
- U/G Tank; Water, Gas, Oil
- Underground Storage Tank, Approx. Loc. — UST
- A/G Tank; Water, Gas, Oil
- Geoenvironmental Boring
- U/G Test Hole LOS A (S.U.E.*)
- Abandoned According to Utility Records — AATUR
- End of Information — E.O.I.

PROJECT REFERENCE NO.	SHEET NO.
44614	2A
ROADWAY DESIGN ENGINEER	PAVEMENT DESIGN ENGINEER

NORTH CAROLINA PROFESSIONAL SEAL 037874 ENGINEER TIMOTHY D. GOINS

Prepared by

vhb 940 Main Campus Drive, Suite 500 Raleigh, NC 27606 NC License No. C-3705

SUNGATE DESIGN GROUP, P.A. 307 JONES FRANKLIN ROAD RALEIGH, NORTH CAROLINA 27606 (919) 851-1912 FAX (919) 851-1918 NC FIRM LICENSE NO. C-0910

FINAL PAVEMENT SCHEDULE

C1	PROP. APPROX. 3″ ASPHALT CONCRETE SURFACE COURSE, TYPE SF9.5A, AT AN AVERAGE RATE OF 165 LBS. PER SQ. YD. IN EACH OF TWO LAYERS.
C2	PROP. VAR. DEPTH ASPHALT CONCRETE SURFACE COURSE, TYPE SF9.5A, AT AN AVERAGE RATE OF 110 LBS. PER SQ. YD. PER 1″ DEPTH TO BE PLACED IN LAYERS NOT TO EXCEED 1.5″ IN DEPTH.
E1	PROP. APPROX. 5″ ASPHALT CONCRETE BASE COURSE, TYPE B25.0B, AT AN AVERAGE RATE OF 570 LBS. PER SQ. YD.
E2	PROP. VAR. DEPTH ASPHALT CONCRETE BASE COURSE, TYPE B25.0B AT AN AVERAGE RATE OF 114 LBS. PER SQ. YD. PER 1″ DEPTH TO BE PLACED IN LAYERS NOT LESS THAN 3″ IN DEPTH OR GREATER THAN 5½″ IN DEPTH.
T	EARTH MATERIAL
U	EXISTING PAVEMENT
W	VARIABLE DEPTH ASPHALT PAVEMENT (SEE WEDGING DETAIL)

NOTE: PAVEMENT EDGE SLOPES ARE 1:1 UNLESS SHOWN OTHERWISE.

MILLING AT PAVEMENT TIE–INS

NOTES TO CONTRACTOR

For surface mixes over 1″ in thickness, mill the existing pavement in accordance with the following sketch as directed by the Engineer.

Locations shall include ties into existing concrete pavement, at bridge approaches where the bridge will not be resurfaced, and at the beginning and ending point of each resurfacing map.

Perform the work in accordance with Section 607 of the January 2018 North Carolina Department of Transportation Standard Specifications for Roads and Structures. Resurfacing will be accomplished at the same time as the milling operation.

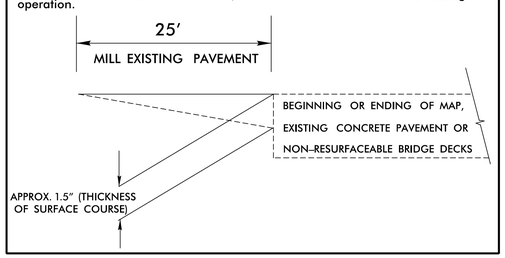

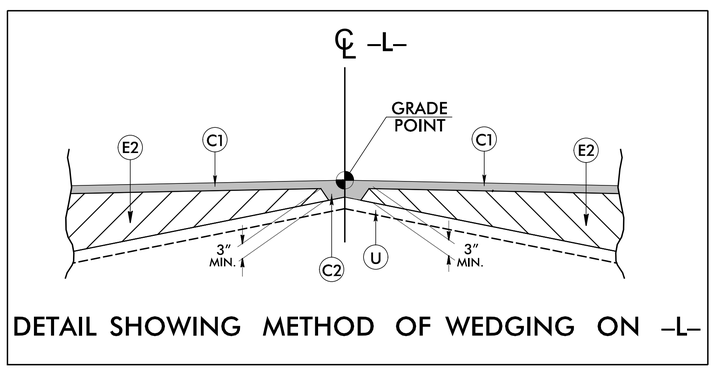

DETAIL SHOWING METHOD OF WEDGING ON –L–

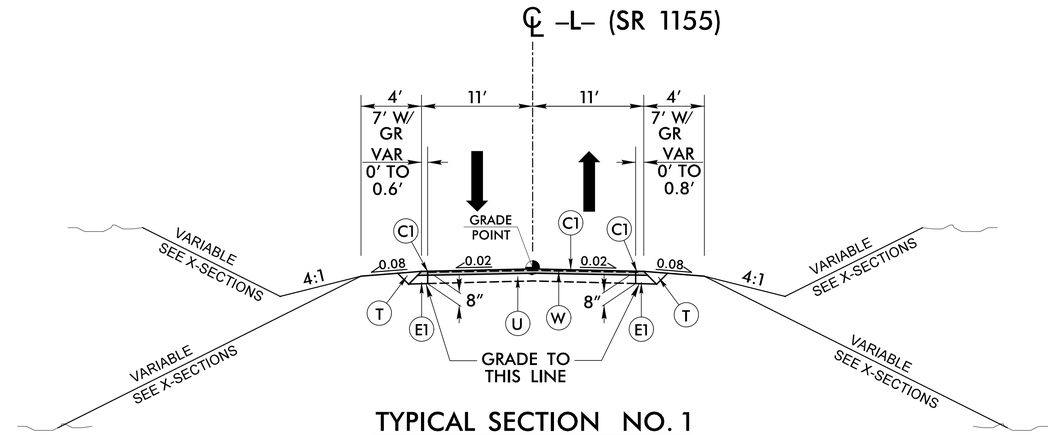

TYPICAL SECTION NO. 1

–L– STA. 13+50.00 TO STA. 15+00.00
–L– STA. 16+60.00 TO STA. 18+50.00

NOTE: FROM –L– STA. 13+50.00 TO STA. 13+75.00 AND –L– STA. 18+25.00 TO STA. 18+50.00, MILL 1.5″ AND WEDGE PAVEMENT TO FINAL GRADE ELEVATION. (SEE MILLING DETAIL THIS PAGE)

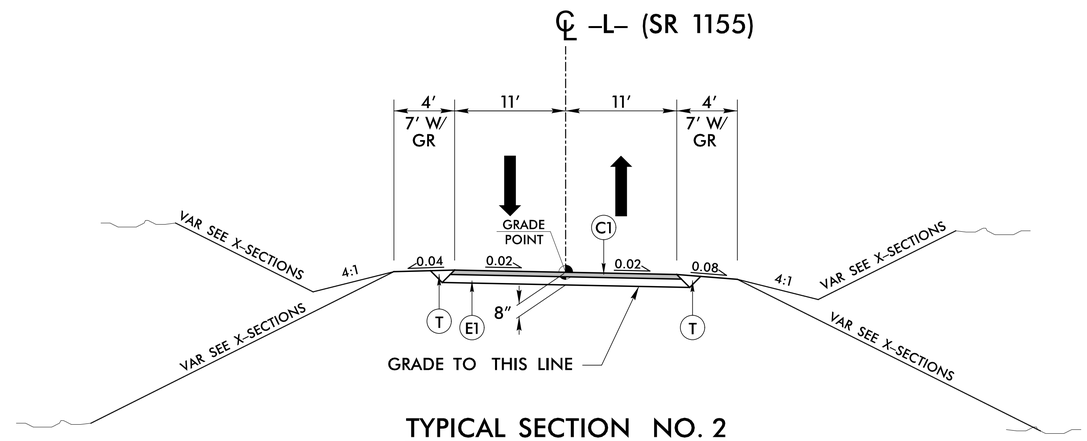

TYPICAL SECTION NO. 2

–L– STA. 15+00.00 TO STA. 15+43.87 (BEGIN BRIDGE)
–L– STA. 16+16.13 (END BRIDGE) TO STA. 16+60.00

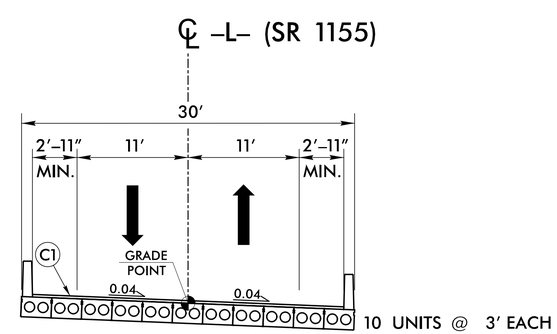

TYPICAL SECTION ON STRUCTURE

–L– STA. 15+43.87 (BEGIN BRIDGE) TO STA. 16+16.13 (END BRIDGE)

6/2/99

2/12/2018
44614_2A_typ.dgn

STATE OF NORTH CAROLINA
DEPT. OF TRANSPORTATION
DIVISION OF HIGHWAYS
RALEIGH, N.C.

ROADWAY DETAIL DRAWING FOR
STRUCTURE ANCHOR UNITS
GUARDRAIL ANCHOR UNIT, TYPE III
FOR ATTACHMENT TO RAIL ON BRIDGE

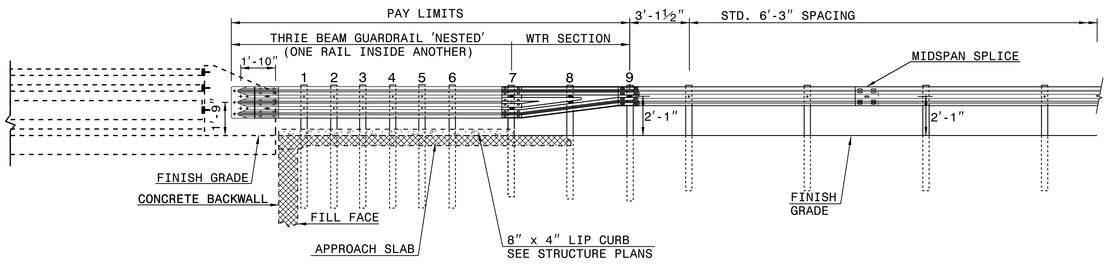

ELEVATION

NOTE:
**POST NOT REQUIRED FOR SKEW ANGLES GREATER THAN 150° OR LESS THAN 30° UNLESS OTHERWISE DIRECTED BY THE ENGINEER.
*THE DISTANCE FROM END OF BRIDGE RAIL TO CENTER LINE OF THE FIRST POST SHOULD BE 11½" IF CONCRETE BACKWALL IS NOT PRESENT.
-SHOULDER BERM GUTTER MUST BE INSTALLED TO THE LIMITS 8" x 4" LIP CURB IS SHOWN IF ANCHOR UNIT IS NOT ADJACENT TO AN APPROACH SLAB.
-MEASURE GUARDRAIL HEIGHT FROM THE TOP OF ADJACENT SURFACE (SHOULDER, BERM, OR GUTTER).
-LAP JOINTS IN THE DIRECTION OF TRAFFIC FLOW.
-SEE SHEET 3 FOR POST SECTIONS 1 THRU 9.

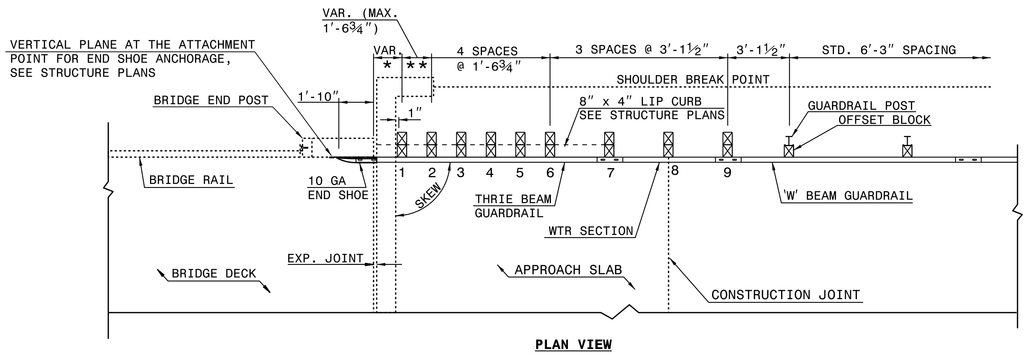

PLAN VIEW

GUARDRAIL ANCHOR UNIT, TYPE III FOR ATTACHMENT TO RAIL ON BRIDGE

SHEET 1 OF 7
862D03

STATE OF NORTH CAROLINA
DEPT. OF TRANSPORTATION
DIVISION OF HIGHWAYS
RALEIGH, N.C.

ROADWAY DETAIL DRAWING FOR
STRUCTURE ANCHOR UNITS
GUARDRAIL ANCHOR UNIT, TYPE III
FOR ATTACHMENT TO RAIL ON BRIDGE

SHEET 1 OF 7
862D03

STATE OF NORTH CAROLINA
DEPT. OF TRANSPORTATION
DIVISION OF HIGHWAYS
RALEIGH, N.C.

ROADWAY DETAIL DRAWING FOR
STRUCTURE ANCHOR UNITS
GUARDRAIL ANCHOR UNIT, TYPE III FOR ATTACHMENT TO
RAIL ON BRIDGE - SUB REGIONAL TIER

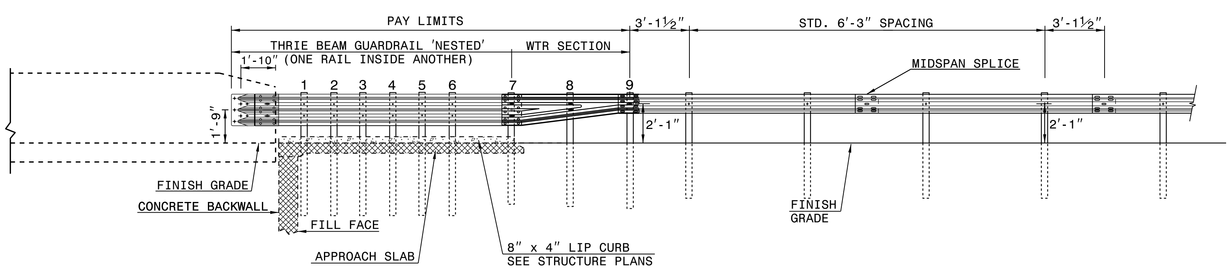

ELEVATION

NOTE:
**POST NOT REQUIRED FOR SKEW ANGLES GREATER THAN 150° OR LESS THAN 30° UNLESS OTHERWISE DIRECTED BY THE ENGINEER.
*THE DISTANCE FROM END OF BRIDGE RAIL TO CENTER LINE OF THE FIRST POST SHOULD BE 11½" IF CONCRETE BACKWALL IS NOT PRESENT.
-SHOULDER BERM GUTTER MUST BE INSTALLED TO THE LIMITS 8" x 4" LIP CURB IS SHOWN IF ANCHOR UNIT IS NOT ADJACENT TO AN APPROACH SLAB.
-MEASURE GUARDRAIL HEIGHT FROM THE TOP OF ADJACENT SURFACE (SHOULDER, BERM, OR GUTTER).
-LAP JOINTS IN THE DIRECTION OF TRAFFIC FLOW.
-SEE SHEET 3 FOR POST SECTIONS 1 THRU 9.

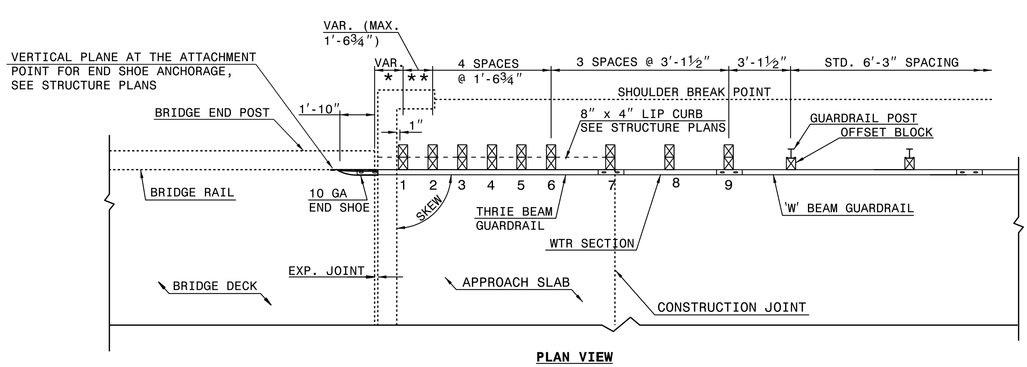

PLAN VIEW

GUARDRAIL ANCHOR UNIT, TYPE III FOR ATTACHMENT TO RAIL ON BRIDGE - SUB REGIONAL TIER

SHEET 2 OF 7
862D03

STATE OF NORTH CAROLINA
DEPT. OF TRANSPORTATION
DIVISION OF HIGHWAYS
RALEIGH, N.C.

ROADWAY DETAIL DRAWING FOR
STRUCTURE ANCHOR UNITS
GUARDRAIL ANCHOR UNIT, TYPE III FOR ATTACHMENT TO
RAIL ON BRIDGE - SUB REGIONAL TIER

SHEET 2 OF 7
862D03

SEE TITLE BLOCK

ORIGINAL BY: J. HOWERTON DATE: 06-22-12
MODIFIED BY: DATE:
CHECKED BY: DATE:
FILE SPEC.:

CONTRACT STANDARDS AND DEVELOPMENT UNIT
Office 919-707-6950 FAX 919-250-4119

DOCUMENT NOT CONSIDERED FINAL UNLESS ALL SIGNATURES COMPLETED

NORTH CAROLINA PROFESSIONAL ENGINEER SEAL 022966 JOHN C. HOWERTON
2/13/2018
B3F8D170CDC45F...
DocuSigned by: John C. Howerton

PROJECT REFERENCE NO.
SHEET NO.

PROJECT REFERENCE NO.	SHEET NO.
44614	2C-4

STATE OF
NORTH CAROLINA
DEPT. OF TRANSPORTATION
DIVISION OF HIGHWAYS
RALEIGH, N.C.

ENGLISH DETAIL DRAWING FOR
MODIFIED CONCRETE FLUME
WITH CONCRETE OR RIP-RAP DITCH

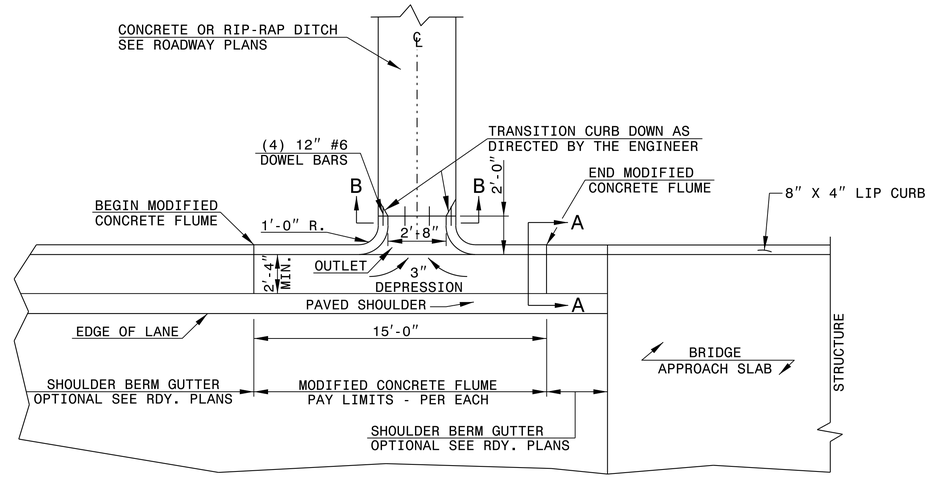

PLAN VIEW

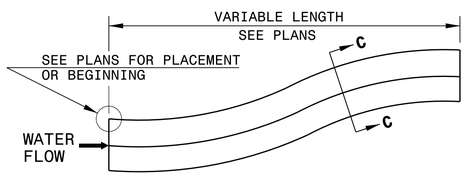

DOWNGRADE OR SAG

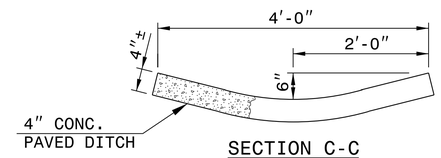

SECTION C-C

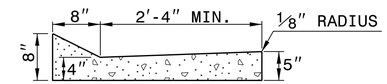

SECTION A-A

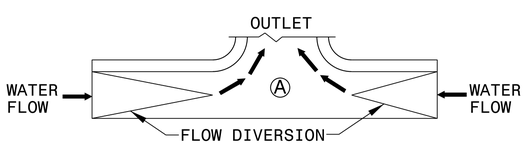

SAG

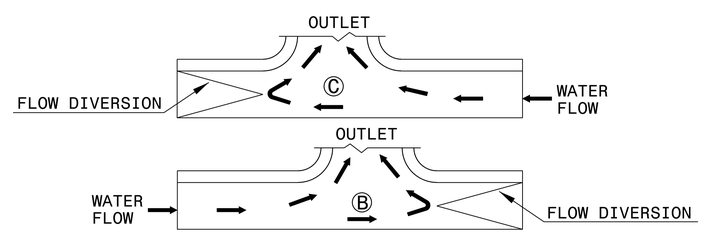

DOWN GRADE

FLOW DIVERSION EXAMPLES

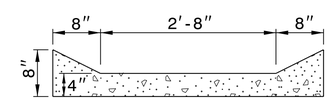

SECTION B-B

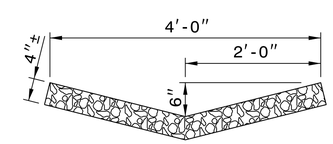

RIP-RAP LINED DITCH

NOTES:

- CONSTRUCT MODIFIED CONCRETE FLUME AND SHOULDER BERM GUTTER IN ACCORDANCE WITH THIS DETAIL.
- CONSTRUCT CONCRETE DITCH IN ACCORDANCE WITH STD. DWG. NO. 850.01.
- CONSTRUCT RIP RAP LINED DITCH IN ACCORDANCE WITH THIS DETAIL, IF CALLED FOR IN PLANS.
- CONCRETE OR RIP RAP LINED DITCH SHALL BE THE TYPE AND LENGTH SPECIFIED BY THE ROADWAY PLANS. THE DITCH SHALL TERMINATE AS SHOWN ON THE PLANS. IF NO TERMINATION IS INDICATED PLACE RIP-RAP AT THE END OF THE DITCH AS INDICATED BY STD. DWG. 876.02 FOR AN 18″ PIPE. TRANSITIONS FROM THE DITCH TO TERMINATION SHALL BE AS DIRECTED BY THE ENGINEER.
- MODIFICATIONS SHALL BE AS DICTATED BY SITE CONDITIONS AND DIRECTED BY THE ENGINEER.

SHEET 1 OF 1
MODFLMDTCH

STATE OF
NORTH CAROLINA
DEPT. OF TRANSPORTATION
DIVISION OF HIGHWAYS
RALEIGH, N.C.

ENGLISH DETAIL DRAWING FOR
MODIFIED CONCRETE FLUME
WITH CONCRETE OR RIP-RAP DITCH

SHEET 1 OF 1
MODFLMDTCH

2/13/2018
NORTH CAROLINA PROFESSIONAL SEAL 022966 ENGINEER
Jack S. Bowerton
873F3D17DCDC45F...

DOCUMENT NOT CONSIDERED FINAL
UNLESS ALL SIGNATURES COMPLETED

CONTRACT STANDARDS
AND DEVELOPMENT UNIT
Office 919-707-6950 FAX 919-250-4119

SEE PLATE FOR TITLE

ORIGINAL BY: E.E. Ward DATE: Apr. 2002
MODIFIED BY: E.E. Ward DATE: July 2004
CHECKED BY: DATE:
FILE SPEC.:

COMPUTED BY: _____ EM	1/18/2018
CHECKED BY: _____ DATE: _____	

PROJECT NO.	SHEET NO.
44614	3B-1

STATE OF NORTH CAROLINA
DIVISION OF HIGHWAYS

SUMMARY OF EARTHWORK

IN CUBIC YARDS

STATION	STATION	UNCLASSIFIED EXCAVATION	UNDERCUT	EMBT +%	BORROW	WASTE
-L- 13+50.00	-L- 15+43.87			235	235	
-L- 16+16.13	-L-18+50.00	2		348	346	
	SUBTOTAL	2		583	581	
	SUBTOTAL	0		0	0	0
	SUBTOTAL	0		0	0	0
	TOTAL	2		583	581	0
MATERIAL FOR SHOULDER CONSTRUCTION						
LOSS DUE TO CLEARING & GRUBBING						
WASTE IN LIEU OF BORROW						
PROJECT TOTAL		2		583	581	
EST. 5% TO REPLACE TOP SOIL ON BORROW PIT					29	
GRAND TOTAL		2			610	
SAY		10			615	

PAVEMENT REMOVAL SUMMARY

IN SQUARE YARDS

SURVEY LINE	Station	Station	LOCATION LT/RT/CL	ASPHALT REMOVAL
-L-	15+00	15+56	LT & RT	140.17
-L-	16+04	16+60	LT & RT	139.02
		TOTAL:		279.19
		SAY:		280

SHOULDER BERM GUTTER SUMMARY

LINE	Station	Station	LENGTH (LF)
-L-	15+18.00	15+43.87	25.87
-L-	16+16.13	16+42.00	25.87
		TOTAL:	51.74
		SAY:	52

Note: Approximate quantities only. Unclassified Excavation, Fine Grading, Clearing and Grubbing, and Removal of existing Asphalt Pavement will be paid for at the contract lump sum price for grading.

GUARDRAIL SUMMARY

"N" = DISTANCE FROM EDGE OF LANE TO FACE OF GUARDRAIL
TOTAL SHOULDER WIDTH = DISTANCE FROM EDGE OF TRAVEL LANE TO SHOULDER BREAK POINT.
FLARE LENGTH = DISTANCE FROM LAST SECTION OF PARALLEL GUARDRAIL TO END OF GUARDRAIL

G = GATING IMPACT ATTENUATOR TYPE 350
NG = NON-GATING IMPACT ATTENUATOR TYPE 350

SURVEY LINE	BEG. STA.	END STA.	LOCATION	LENGTH			WARRANT POINT		"N" DIST. FROM E.O.L.	TOTAL SHOUL WIDTH	FLARE LENGTH		W		ANCHORS							SINGLE FACED CONCRETE BARRIER	REMOVE EXISTING GUARDRAIL	REMOVE & STOCKPILE EXISTING GUARDRAIL	REMARKS
				STRAIGHT	SHOP CURVED	DOUBLE FACED	APPROACH END	TRAILING END			APPROACH END	TRAILING END	APPROACH END	TRAILING END	XI MOD	XI	GREU TL-2	M-350	TYPE III	CAT-1					
L	14+93.87	15+43.87	RT	50			15+43.87		2.92	4	50		1				1		1						
L	16+16.13	16+66.13	RT	50				16+66.13	2.92	4		50		1			1		1						
L	14+93.87	15+43.87	LT	50				14+93.87	2.92	4		50		1			1		1						
L	16+16.13	16+66.13	LT	50			16+66.13		2.92	4	50		1				1		1						
SUBTOTAL				200													4		4						
GREU TL-2	4 @ 25			-100																					
TYPE III	4 @ 18.75			-75																					
TOTAL				25		5 ADDITIONAL GUARDRAILS											4		4						

PROJECT REFERENCE NO.	SHEET NO.
44614	4
R/W SHEET NO.	

ROADWAY DESIGN ENGINEER

NORTH CAROLINA PROFESSIONAL SEAL 037874 ENGINEER TIMOTHY D. GOINS

HYDRAULICS ENGINEER

DOCUSIGNED BY: Joshua G. Dalton
DS4A0BE1A9A2E2...
SEAL P 26971 ENGINEER JOSHUA G. DALTON
2/14/2018

Prepared by

vhb
940 Main Campus Drive, Suite 500
Raleigh, NC 27606
NC License No. C-3705

SUNGATE DESIGN GROUP, P.A.
P.O. BOX 17674
RALEIGH, NORTH CAROLINA 27619
PH: (919) 772-2314
FAX: (919) 772-2315
NC LICENSE NO. C-0312

DATUM DESCRIPTION

THE LOCALIZED COORDINATE SYSTEM DEVELOPED FOR THIS PROJECT IS BASED ON THE STATE PLANE COORDINATES ESTABLISHED BY NCDOT FOR MONUMENT "930026-1"
WITH NAD 83/NA 2011 STATE PLANE GRID COORDINATES OF
NORTHING: 775,478.4294(ft) EASTING: 2,764,350.4748(ft)
ELEVATION: 2.99(ft)
THE AVERAGE COMBINED GRID FACTOR USED ON THIS PROJECT (GROUND TO GRID) IS: 0.999933327
THE N.C. LAMBERT GRID BEARING AND
LOCALIZED HORIZONTAL GROUND DISTANCE FROM
"930026-1" TO -L- STATION 10+00.00 IS
N 20°17'12.20"E 621.1362'
ALL LINEAR DIMENSIONS ARE LOCALIZED HORIZONTAL DISTANCES
VERTICAL DATUM USED IS NAVD 88

-L- CURVE DATA

PI Sta 10+90.87	PI Sta 12+51.94	PI Sta 15+08.06
Δ = 16° 09' 46.6" (RT)	Δ = 7° 06' 20.2" (RT)	Δ = 15° 52' 03.6" (RT)
D = 8° 57' 08.9"	D = 4° 58' 56.1"	D = 5° 27' 24.3"
L = 180.54'	L = 142.62'	L = 290.79'
T = 90.87'	T = 71.40'	T = 146.33'
R = 640.00'	R = 1,150.00'	R = 1,050.00'

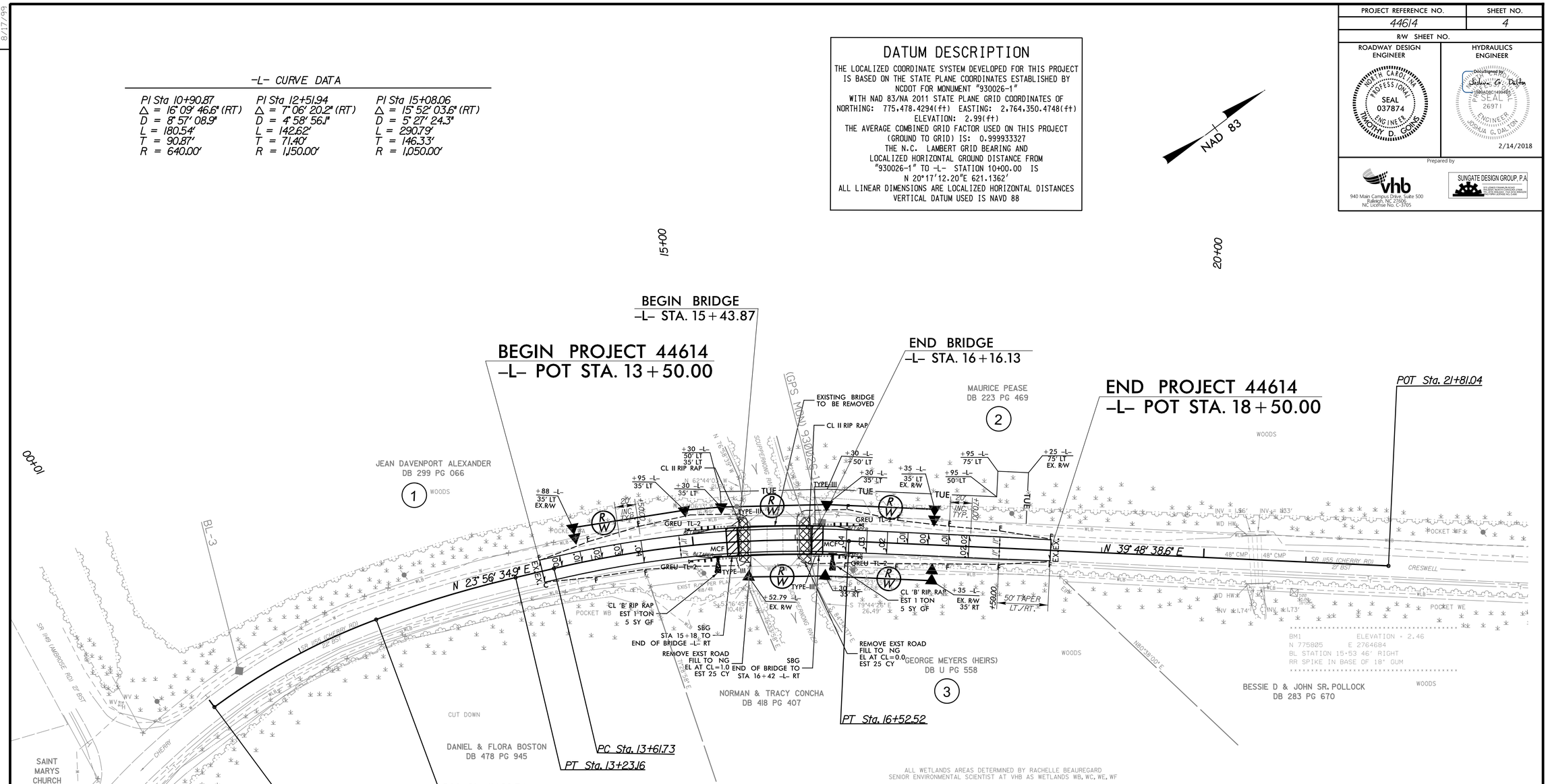

ALL WETLANDS AREAS DETERMINED BY RACHELLE BEAUREGARD
SENIOR ENVIRONMENTAL SCIENTIST AT VHB AS WETLANDS WB, WC, WE, WF

RIGHT OF WAY AREA DATA

PARCEL NO.	PROPERTY OWNER NAME	R/W AREA	TUE
1	JEAN DAVENPORT ALEXANDER	1745.51 SF	689.91 SF
2	MAURICE PEASE	1555.89 SF	5449.37 SF
3	GEORGE MEYERS (HEIRS)	1837.26 SF	

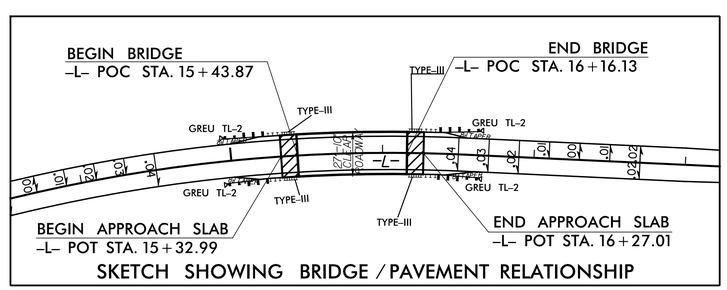

SKETCH SHOWING BRIDGE / PAVEMENT RELATIONSHIP

FOR -L- PROFILE SEE SHEET 5

8/17/99

2/14/2018
44614_sig_psh04.dgn

5/28/99

Prepared by

vhb
940 Main Campus Drive, Suite 500
Raleigh, NC 27606
NC License No. C-3705

SUNGATE DESIGN GROUP, P.A.
915 JONES FRANKLIN ROAD
RALEIGH, NORTH CAROLINA 27606
(919) 859-2243 FAX (919) 859-2318
FIRM PERM LICENSE NO. C-1810

PROJECT REFERENCE NO.	SHEET NO.
44614	5

ROADWAY DESIGN ENGINEER

NORTH CAROLINA PROFESSIONAL SEAL 037874 ENGINEER TIMOTHY D. GOINS

HYDRAULICS ENGINEER

Joshua G. Dalton
NORTH CAROLINA PROFESSIONAL SEAL 29971 ENGINEER JOSHUA G. DALTON
2/14/2018

-L-

BM #1
RR SPIKE IN BASE OF 18" GUM
ELEV.=2.46'
-L- STA.20+90, 30.22' RT

BRIDGE HYDRAULIC DATA

DESIGN DISCHARGE	= 1400	CFS
DESIGN FREQUENCY	= 5	YRS
DESIGN HW ELEVATION	= 2.8	FT
BASE DISCHARGE	= 3900	CFS
BASE FREQUENCY	= 100	YRS
BASE HW ELEVATION	= 5.27	FT
OVERTOPPING DISCHARGE	= 1600	CFS
OVERTOPPING FREQUENCY	= <10	YRS
OVERTOPPING ELEVATION	= 3.0	FT
	=	FT
DATE OF SURVEY	= 3-3-16	
W.S. ELEVATION AT DATE OF SURVEY	= 0.72	FT

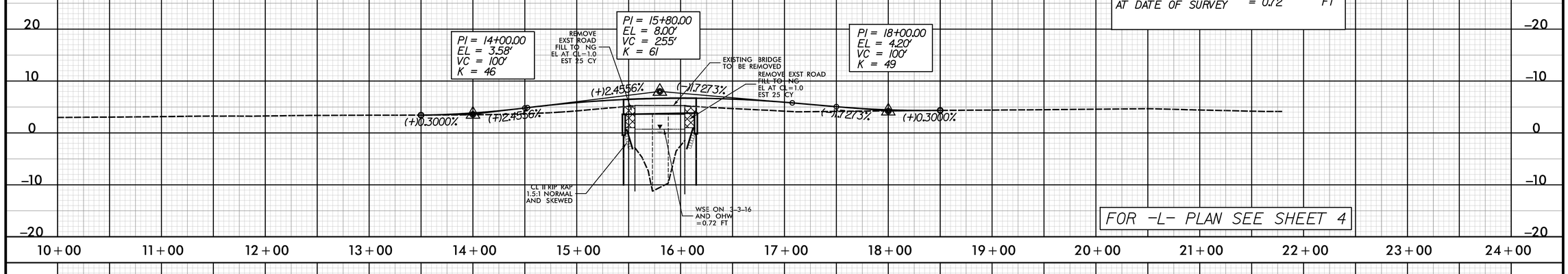

FOR -L- PLAN SEE SHEET 4

2/14/2018
44614_hy_pf105.dgn
smmcpas

STATE OF NORTH CAROLINA
DIVISION OF HIGHWAYS

TRANSPORTATION MANAGEMENT PLAN

WASHINGTON COUNTY

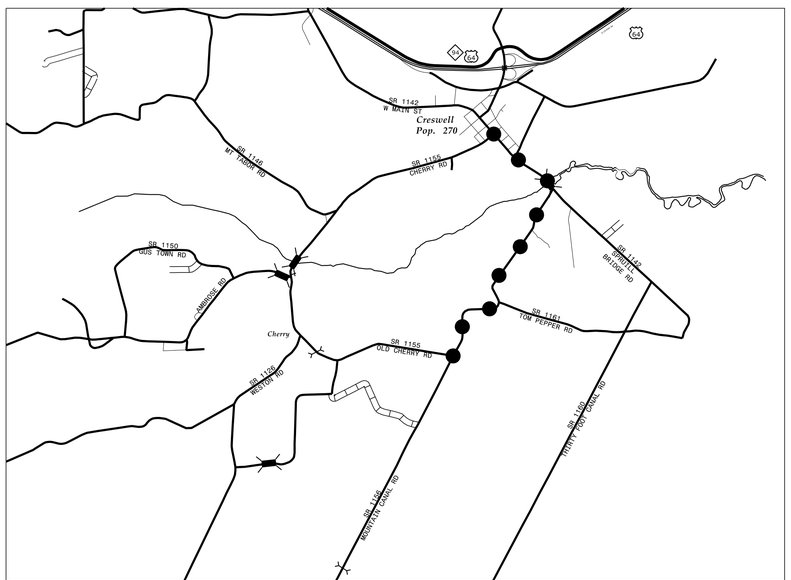

VICINITY MAP — OFF SITE DETOUR

INDEX OF SHEETS

SHEET NO.	TITLE
TMP-1	TITLE SHEET, VICINITY MAP AND INDEX OF SHEETS, LIST OF APPLICABLE ROADWAY STANDARD DRAWINGS, AND LEGEND
TMP-2	TRANSPORTATION OPERATIONS PLAN
TMP-3	DETOUR PLAN

ROADWAY STANDARD DRAWINGS

THE FOLLOWING ROADWAY STANDARDS AS SHOWN IN "ROADWAY STANDARD DRAWINGS" - PROJECT SERVICES UNIT - N.C. DEPARTMENT OF TRANSPORTATION - RALEIGH, N.C., DATED JANUARY 2018 ARE APPLICABLE TO THIS PROJECT AND BY REFERENCE HEREBY ARE CONSIDERED A PART OF THESE PLANS:

STD. NO.	TITLE
1101.01	WORK ZONE ADVANCE WARNING SIGNS
1101.03	TEMPORARY ROAD CLOSURES
1101.04	TEMPORARY SHOULDER CLOSURES
1101.11	TRAFFIC CONTROL DESIGN TABLES
1110.01	STATIONARY WORK ZONE SIGNS
1145.01	BARRICADES
1205.01	PAVEMENT MARKINGS - LINE TYPES AND OFFSETS
1205.02	PAVEMENT MARKINGS - TWO-LANE AND MULTI-LANE ROADWAYS
1205.12	PAVEMENT MARKINGS - BRIDGES
1250.01	RAISED PAVEMENT MARKERS - INSTALLATION SPACING
1251.01	RAISED PAVEMENT MARKERS - PERMANENT AND TEMPORARY
1261.01	GUARDRAIL AND BARRIER DELINEATORS - INSTALLATION SPACING
1261.02	GUARDRAIL AND BARRIER DELINEATORS - TYPES AND MOUNTING
1262.01	GUARDRAIL END DELINEATION

LEGEND

GENERAL

- DIRECTION OF TRAFFIC FLOW
- EXIST. PVMT.
- NORTH ARROW
- PROPOSED PVMT.
- TEMP. SHORING (LOCATION PURPOSES ONLY)
- WORK AREA

TRAFFIC CONTROL DEVICES

- BARRICADE (TYPE III)

TEMPORARY SIGNING

- STATIONARY SIGN

vhb
940 Main Campus Drive, Suite 500 Raleigh, NC 27606
NC License No. C-3705

SHEET NO.
TMP-1

TIP PROJECT: 44614

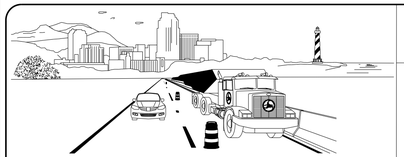

WORK ZONE SAFETY & MOBILITY
"from the MOUNTAINS to the COAST"

N.C.D.O.T. WORK ZONE TRAFFIC CONTROL
1561 MAIL SERVICE CENTER (MSC) RALEIGH, NC 27699-1561
750 N. GREENFIELD PARKWAY, GARNER, NC 27529 (DELIVERY)
PHONE: (919) 773-2800 FAX: (919) 771-2745

JOSEPH HUMMER, P.E. — STATE TRAFFIC MANAGEMENT ENGINEER
STEVE KITE, P.E. — TRAFFIC CONTROL PROJECT ENGINEER
TRAFFIC CONTROL PROJECT DESIGN ENGINEER
TRAFFIC CONTROL DESIGN ENGINEER

DIVISION OF HIGHWAYS · STATE OF NORTH CAROLINA · DEPARTMENT OF TRANSPORTATION · WORK ZONE TRAFFIC CONTROL

JOSEPH LEWIS, PE
TRAFFIC CONTROL
PROJECT ENGINEER

A. MATTHEW THIGPEN, PE
TRAFFIC CONTROL
PROJECT DESIGN ENGINEER

APPROVED: _____
DATE: _____

SEAL — NORTH CAROLINA PROFESSIONAL SEAL 034343 ENGINEER A. MATTHEW THIGPEN

2/12/2018
\\vhb\proj\Raleigh\38564.04 NCDOT 44614 Washington\NCDOT\Traffic\TrafficControl\TCP\44614_tc_tmp01.dgn
User:mthigpen

PROJ. REFERENCE NO.	SHEET NO.
44614	TMP-2

GENERAL NOTES

CHANGES MAY BE REQUIRED WHEN PHYSICAL DIMENSIONS IN THE DETAIL DRAWINGS, STANDARD DETAILS, AND ROADWAY DETAILS ARE NOT ATTAINABLE TO MEET FIELD CONDITIONS OR RESULT IN DUPLICATE OR UNDESIRED OVERLAPPING OF DEVICES. MODIFICATION MAY INCLUDE: MOVING, SUPPLEMENTING, COVERING, OR REMOVAL OF DEVICES AS DIRECTED BY THE ENGINEER.

THE FOLLOWING GENERAL NOTES APPLY AT ALL TIMES FOR THE DURATION OF THE CONSTRUCTION PROJECT EXCEPT WHEN OTHERWISE NOTED IN THE PLAN OR DIRECTED BY THE ENGINEER.

TRAFFIC PATTERN ALTERATIONS

A) NOTIFY THE ENGINEER THIRTY (30) CALENDAR DAYS PRIOR TO ANY TRAFFIC PATTERN ALTERATION.

SIGNING

B) INSTALL ADVANCE WORK ZONE WARNING SIGNS WHEN WORK IS WITHIN 40 FT FROM THE EDGE OF TRAVEL LANE AND NO MORE THAN THREE (3) DAYS PRIOR TO THE BEGINNING OF CONSTRUCTION.

C) PROVIDE SIGNING AND DEVICES REQUIRED TO CLOSE THE ROAD ACCORDING TO THE ROADWAY STANDARD DRAWINGS AND TRAFFIC CONTROL PLANS.

PROVIDE SIGNING REQUIRED FOR THE OFF-SITE DETOUR ROUTE AS SHOWN ON SHEET TMP-3.

D) COVER OR REMOVE ALL SIGNS AND DEVICES REQUIRED TO CLOSE THE ROAD WHEN ROAD CLOSURE IS NOT IN OPERATION.

COVER OR REMOVE ALL SIGNS REQUIRED FOR THE OFF-SITE DETOUR WHEN THE DETOUR IS NOT IN OPERATION.

E) ENSURE ALL NECESSARY SIGNING IS IN PLACE PRIOR TO ALTERING ANY TRAFFIC PATTERN.

TRAFFIC CONTROL DEVICES

F) PLACE TYPE III BARRICADES, WITH "ROAD CLOSED" SIGN R11-2 ATTACHED, OF SUFFICIENT LENGTH TO CLOSE ENTIRE ROADWAY.

PAVEMENT MARKINGS AND MARKERS

G) INSTALL PAVEMENT MARKINGS AND PAVEMENT MARKERS ON THE FINAL SURFACE AS FOLLOWS:

ROAD NAME	MARKING	MARKER
-L- (SR 1155)	PAINT	RAISED

H) TIE PROPOSED PAVEMENT MARKING LINES TO EXISTING PAVEMENT MARKING LINES.

I) REMOVE/REPLACE ANY CONFLICTING/DAMAGED PAVEMENT MARKINGS AND MARKERS BY THE END OF EACH DAY'S OPERATION.

J) PASSING ZONE WILL BE DETERMINED IN THE FIELD AND MUST BE APPROVED BY THE ENGINEER.

PHASING

PHASE I

PRIOR TO ANY CONSTRUCTION OPERATIONS, INSTALL AND COVER DETOUR SIGNS AS SHOWN ON TMP-3 AND IN ACCORDANCE WITH ROADWAY STANDARD 1101.03 SHEET 1 OF 9. DO NOT INSTALL ADVANCE WARNING SIGNS MORE THAN 3 DAYS PRIOR TO BEGINNING OF WORK UNLESS COVERED.

PHASE II

INSTALL BARRICADES AND UNCOVER DETOUR SIGNS. CLOSE -L- (SR 1155) TO TRAFFIC AS SHOWN ON TMP-3. CONSTRUCT BRIDGE, APPROACHES, AND ROADWAY UP TO AND INCLUDING THE FINAL LAYER OF SURFACE COURSE.

PHASE III

UPON COMPLETION OF BRIDGE, APPROACHES AND ROADWAY, PLACE FINAL PAVEMENT MARKINGS AND MARKERS IN ACCORDANCE WITH ROADWAY STANDARD DRAWINGS AND PAVEMENT MARKING PLANS. REMOVE ALL ROAD CLOSURE SIGNS AND BARRICADES AND OPEN -L- (SR 1155) TO THROUGH TRAFFIC.

APPROVED:_____ DATE:_____

SEAL

NORTH CAROLINA PROFESSIONAL SEAL 034343 ENGINEER MATTHEW THIGPEN

DIVISION OF HIGHWAYS STATE OF NORTH CAROLINA DEPARTMENT OF TRANSPORTATION WORK ZONE TRAFFIC CONTROL

TRANSPORTATION OPERATIONS PLAN

2/12/2018
\\vhb\proj\Raleigh\38564.04 NCDOT 44614 Washington\NCDOT\Traffic\TrafficControl\TCP\44614_tc_tmp02.dgn
User:mthigpen

PROJ. REFERENCE NO.	SHEET NO.
44614	TMP-3

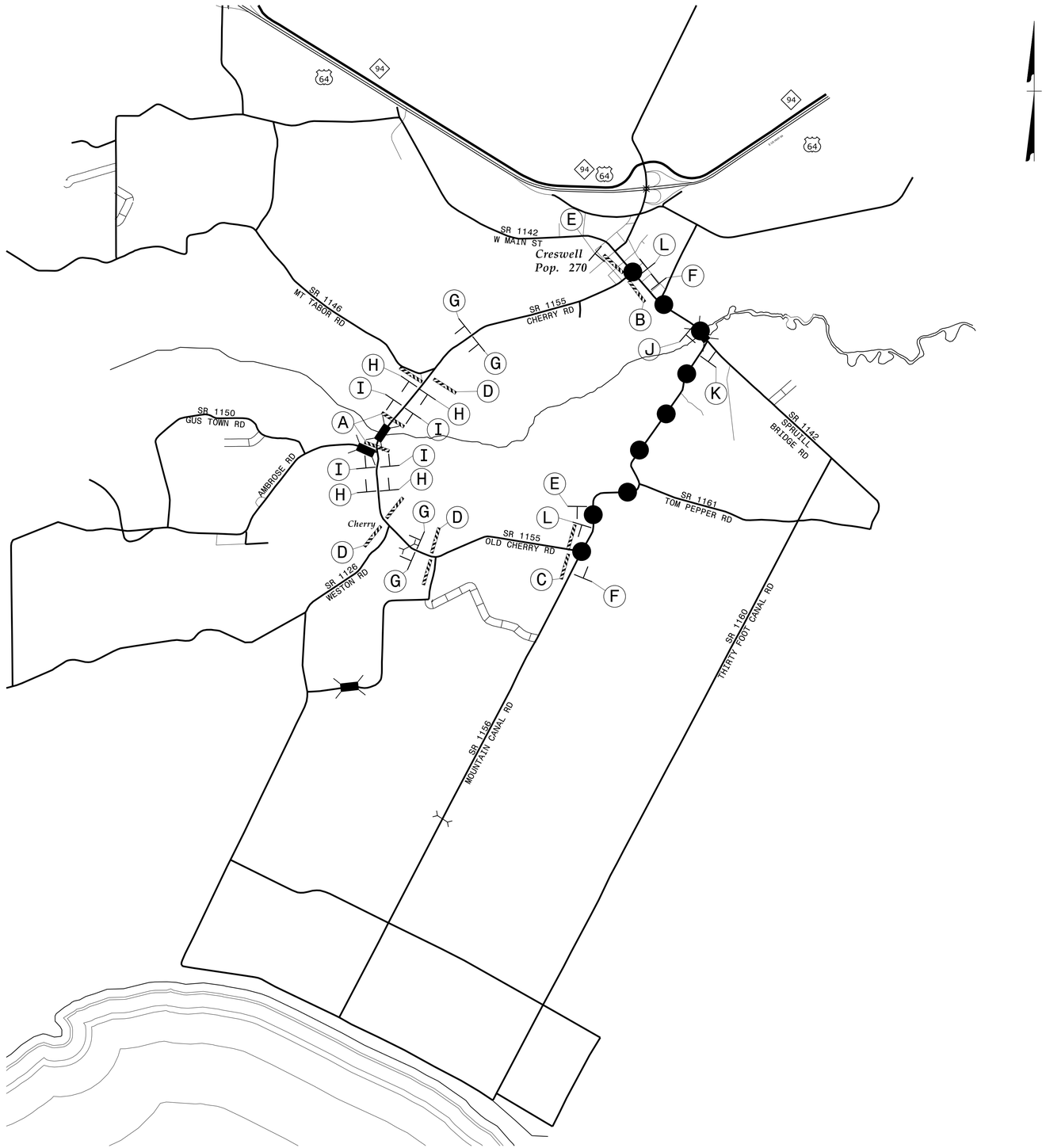

A

R11-2
48" x 30"

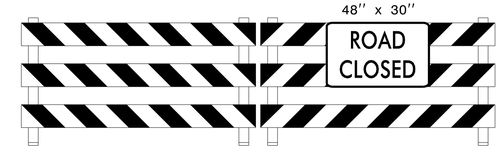

TYPE III BARRICADE(S)

B

R11-3
60" x 30"

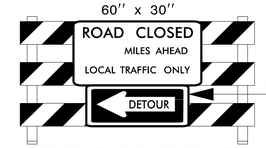

M4-10L
48" x 18"

TYPE III BARRICADE

C

R11-3
60" x 30"

M4-10R
48" x 18"

TYPE III BARRICADE

D

R11-4
60" x 30"

TYPE III BARRICADE

E

W20-3
48" X 48"

NEXT RIGHT

SP-4R
42" X 12"

F

W20-3
48" X 48"

NEXT LEFT

SP-4L
42" X 12"

G

W20-3
48" X 48"

H

W20-3
48" X 48"

I

W20-3
48" X 48"

J

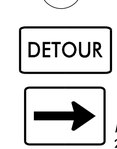

M4-8
24" X 12"

M6-1
21" X 15"

K

M4-8
24" X 12"

M6-1 L
21" X 15"

L

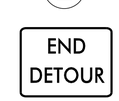

M4-8 A
24" X 18"

APPROVED: _____ DATE: _____

SEAL

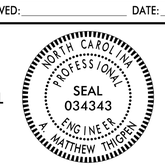

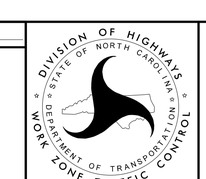

DETOUR SIGNING

2/12/2018
\\vhb\proj\Raleigh\38564.04 NCDOT 44614 Washington\NCDOT\Traffic\TrafficControl\TCP\44614_tc_tmp03.dgn
User:mthigpen

TIP NO.	SHEET NO.
44614	PMP-1

APPROVED: _____

DATE: _____

SEAL

NORTH CAROLINA PROFESSIONAL SEAL 034343 ENGINEER A. MATTHEW THIGPEN

DOCUMENT NOT CONSIDERED FINAL UNLESS ALL SIGNATURES COMPLETED

STATE OF NORTH CAROLINA
DEPARTMENT OF TRANSPORTATION

PAVEMENT MARKING PLAN
WASHINGTON COUNTY

T.I.P.: 44614

CONTRACT:

INDEX

SHEET NO.	DESCRIPTION
PMP-1	PAVEMENT MARKING PLAN TITLE AND SCHEDULE SHEET
PMP-2	PAVEMENT MARKING DETAIL

PAVEMENT MARKING SCHEDULE

SYMBOL	DESCRIPTION	TOTAL QUANTITY
	THERMOPLASTIC (4", 90 MILS)	TOTAL 856 LF
TA	WHITE EDGELINE	
	THERMOPLASTIC (4", 120 MILS)	TOTAL 856 LF
TI	YELLOW DOUBLE CENTER	
	COLD APPLIED PLASTIC (4")	TOTAL 288 LF
CA	WHITE EDGELINE	
CI	YELLOW DOUBLE CENTER	
	PERMANENT RAISED PAVEMENT MARKERS	TOTAL 7 EA
MA	YELLOW & YELLOW	
MB	CRYSTAL & RED	

GENERAL NOTES

THE FOLLOWING GENERAL NOTES APPLY AT ALL TIMES FOR THE DURATION OF THE CONSTRUCTION PROJECT, EXCEPT WHEN OTHERWISE NOTED IN THE PLAN, OR DIRECTED BY THE ENGINEER.

A) INSTALL PAVEMENT MARKINGS AND PAVEMENT MARKERS ON THE FINAL SURFACE AS FOLLOWS:

ROAD NAME	MARKING	MARKER
-L- LINE	THERMOPLASTIC	PERMANENT RAISED
BRIDGES	COLD APPLIED PLASTIC	

B) TIE PROPOSED PAVEMENT MARKING LINES TO EXISTING PAVEMENT MARKING LINES.

C) REMOVE/REPLACE ANY CONFLICTING/DAMAGED PAVEMENT MARKINGS AND MARKERS.

D) PASSING ZONES WILL BE DETERMINED IN THE FIELD AND MUST BE APPROVED BY THE ENGINEER.

E) REMOVE ALL RESIDUE AND SURFACE LAITANCE BY ACCEPTABLE METHODS ON CONCRETE BRIDGE DECKS PRIOR TO PLACING (insert marking material) PAVEMENT MARKING MATERIAL.

F) TYPE III COLD APPLIED PLASTIC MAY BE USED IN LIEU OF TYPE II COLD APPLIED PLASTIC. IF TYPE III COLD APPLIED PLASTIC IS USED, IT SHALL BE PAID FOR USING THE TYPE II COLD APPLIED PLASTIC PAY ITEM.

ROADWAY STANDARD DRAWING

THE FOLLOWING ROADWAY STANDARDS AS APPEAR IN "ROADWAY STANDARD DRAWINGS" - PROJECT SERVICES UNIT - N.C. DEPARTMENT OF TRANSPORTATION - RALEIGH, N.C., DATED JANUARY 2018 ARE APPLICABLE TO THIS PROJECT AND BY REFERENCE HEREBY ARE CONSIDERED A PART OF THESE PLANS:

STD. NO.	TITLE
1205.01	PAVEMENT MARKINGS - LINE TYPES AND OFFSETS
1205.02	PAVEMENT MARKINGS - TWO-LANE AND MULTILANE ROADWAYS
1205.12	PAVEMENT MARKINGS - BRIDGES
1250.01	RAISED PAVEMENT MARKERS - INSTALLATION SPACING
1251.01	RAISED PAVEMENT MARKERS - PERMANENT AND TEMPORARY
1261.01	GUARDRAIL AND BARRIER DELINEATORS - INSTALLATION SPACING
1261.02	GUARDRAIL AND BARRIER DELINEATORS - TYPES AND MOUNTING
1262.01	GUARDRAIL END DELINEATION

PLAN PREPARED BY: VHB Engineering NC, P.C.

A. Matthew Thigpen, P.E. Project Engineer

_____ title here

vhb
940 Main Campus Drive, Suite 500
Raleigh, NC 27606
P: (919) 829-0328
NC License No. C-3705

TIP NO.	SHEET NO.
44614	PMP-2

APPROVED: _____

DATE: _____

SEAL

NORTH CAROLINA PROFESSIONAL SEAL 034343 ENGINEER A. MATTHEW THIGPEN

DOCUMENT NOT CONSIDERED FINAL UNLESS ALL SIGNATURES COMPLETED

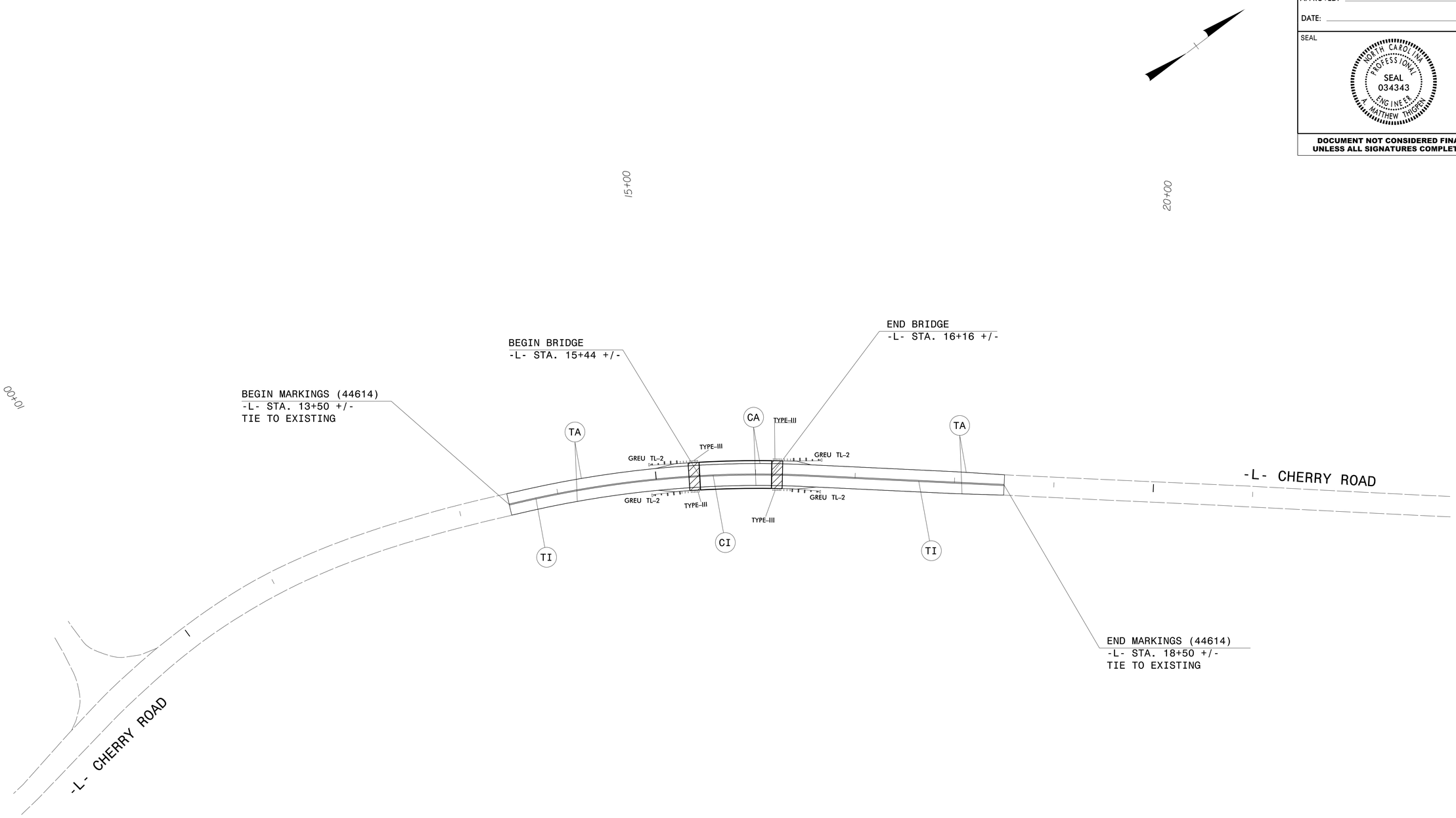

PAVEMENT MARKING DETAIL

2/12/2018
\\rb\proj\Raleigh\38564.04 NCDOT 44614 Washington\NCDOT\Traffic\Pavement Marking\44614_pm_psh04.dgn
User:mthigpen

TIP PROJECT: 44614

STATE	STATE PROJECT REFERENCE NO.	SHEET NO.	TOTAL SHEETS
N.C.	44614	EC-1	

STATE PROJ. NO.	F.A. PROJ. NO.	DESCRIPTION

STATE OF NORTH CAROLINA
DIVISION OF HIGHWAYS

PLAN FOR PROPOSED
HIGHWAY EROSION CONTROL

WASHINGTON COUNTY

LOCATION: BRIDGE NO. 26 ON SR 1155 OVER THE SCUPPERNONG RIVER

TYPE OF WORK: GRADING, PAVING, DRAINAGE, AND STRUCTURE

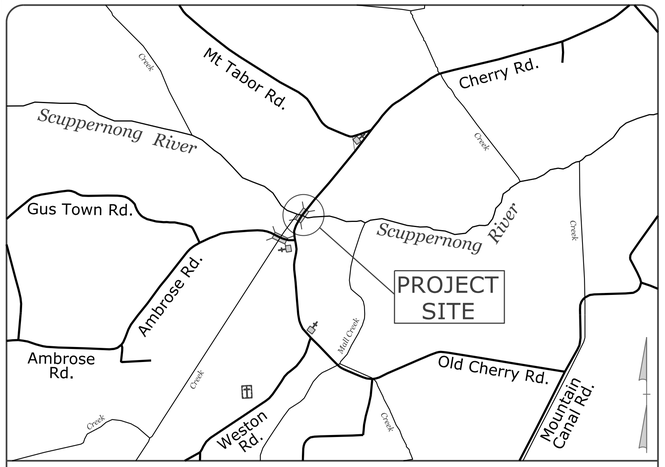

VICINITY MAP
NOT TO SCALE

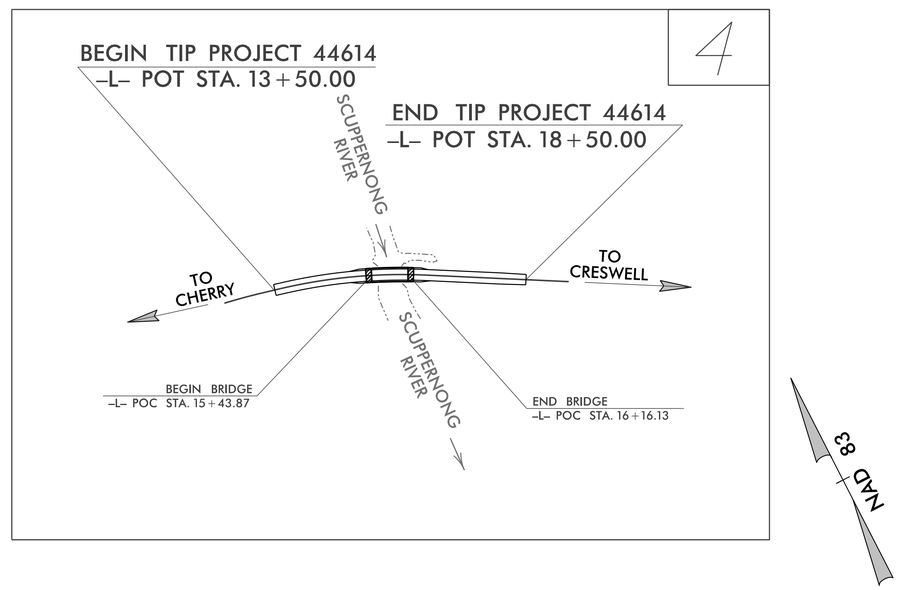

EROSION AND SEDIMENT CONTROL MEASURES

Std. #	Description	Symbol
1630.03	Temporary Silt Ditch	TSD
1630.05	Temporary Diversion	TD
1605.01	Temporary Silt Fence	
1606.01	Special Sediment Control Fence	
1622.01	Temporary Berms and Slope Drains	
1630.02	Silt Basin Type B	
1633.01	Temporary Rock Silt Check Type-A	
	Temporary Rock Silt Check Type-A with Matting and Polyacrylamide (PAM)	
1633.02	Temporary Rock Silt Check Type-B	
	Wattle/ Coir Fiber Wattle	EW CFW
	Wattle/ Coir Fiber Wattle with Polyacrylamide (PAM)	
1634.01	Temporary Rock Sediment Dam Type-A	
1634.02	Temporary Rock Sediment Dam Type-B	
1635.01	Rock Pipe Inlet Sediment Trap Type-A	
1635.02	Rock Pipe Inlet Sediment Trap Type-B	
1630.04	Stilling Basin	
1630.06	Special Stilling Basin	
	Rock Inlet Sediment Trap:	
1632.01	Type A	A
1632.02	Type B	B
1632.03	Type C	C
	Skimmer Basin	
	Tiered Skimmer Basin	
	Infiltration Basin	

THIS PROJECT CONTAINS EROSION CONTROL PLANS FOR CLEARING AND GRUBBING PHASE OF CONSTRUCTION.

CLEARING ON THIS PROJECT SHALL BE PERFORMED TO THE LIMITS ESTABLISHED BY METHOD II.

GRAPHIC SCALE

50 25 0 50 100
PLANS

2018 STANDARD SPECIFICATIONS

ROADSIDE ENVIRONMENTAL UNIT
DIVISION OF HIGHWAYS
STATE OF NORTH CAROLINA

THESE EROSION AND SEDIMENT CONTROL PLANS COMPLY WITH THE REGULATIONS SET FORTH BY THE NCG-010000 GENERAL CONSTRUCTION PERMIT EFFECTIVE AUGUST 1, 2016 ISSUED BY THE NORTH CAROLINA DEPARTMENT OF ENVIRONMENT AND NATURAL RESOURCES DIVISION OF WATER QUALITY.

Prepared in the Office of:

SUNGATE DESIGN GROUP, P.A.
905 JONES FRANKLIN ROAD
RALEIGH, NORTH CAROLINA 27606
TEL (919) 859-2243
ENG FIRM LICENSE NO. C-890

Designed by:

WILLIAM T. PERRY — *NAME*
3899 — *LEVEL III CERTIFICATION NO.*

Roadway Standard Drawings

The following roadway english standards as appear in "Roadway Standard Drawings"– Roadway Design Unit – N. C. Department of Transportation – Raleigh, N. C., dated January 2018 and the latest revison thereto are applicable to this project and by reference hereby are considered a part of these plans.

1604.01	Railroad Erosion Control Detail	1632.01	Rock Inlet Sediment Trap Type A
1605.01	Temporary Silt Fence	1632.02	Rock Inlet Sediment Trap Type B
1606.01	Special Sediment Control Fence	1632.03	Rock Inlet Sediment Trap Type C
1607.01	Gravel Construction Entrance	1633.01	Temporary Rock Silt Check Type A
1622.01	Temporary Berms and Slope Drains	1633.02	Temporary Rock Silt Check Type B
1630.01	Riser Basin	1634.01	Temporary Rock Sediment Dam Type A
1630.02	Silt Basin Type B	1634.02	Temporary Rock Sediment Dam Type B
1630.03	Temporary Silt Ditch	1635.01	Rock Pipe Inlet Sediment Trap Type A
1630.04	Stilling Basin	1635.02	Rock Pipe Inlet Sediment Trap Type B
1630.05	Temporary Diversion	1640.01	Coir Fiber Baffle
1630.06	Special Stilling Basin	1645.01	Temporary Stream Crossing
1631.01	Matting Installation		

PROJECT REFERENCE NO.	SHEET NO.
44614	EC-2
ROADWAY DESIGN ENGINEER	HYDRAULICS ENGINEER

DIVISION OF HIGHWAYS
STATE OF NORTH CAROLINA

SOIL STABILIZATION TIMEFRAMES

SITE DESCRIPTION	STABILIZATION TIME	TIMEFRAME EXCEPTIONS
PERIMETER DIKES, SWALES, DITCHES AND SLOPES	7 DAYS	NONE
HIGH QUALITY WATER (HQW) ZONES	7 DAYS	NONE
SLOPES STEEPER THAN 3:1	7 DAYS	IF SLOPES ARE 10' OR LESS IN LENGTH AND ARE NOT STEEPER THAN 2:1, 14 DAYS ARE ALLOWED.
SLOPES 3:1 OR FLATTER	14 DAYS	7 DAYS FOR SLOPES GREATER THAN 50' IN LENGTH.
ALL OTHER AREAS WITH SLOPES FLATTER THAN 4:1	14 DAYS	NONE, EXCEPT FOR PERIMETERS AND HQW ZONES.

PROJECT REFERENCE NO.	SHEET NO.
44614	EC-03/CONST.04
R/W SHEET NO.	
ROADWAY DESIGN ENGINEER	HYDRAULICS ENGINEER

CLEARING AND GRUBBING &
FINAL GRADING
EROSION CONTROL FOR
CONSTRUCTION SHEET 04

NOTE:
PLACE TEMPORARY ROCK SEDIMENT DAMS TYPE – B AND TEMPORARY ROCK SILT CHECKS TYPE – A AT DRAINAGE OUTLETS.

NOTE:
UTILIZE TEMPORARY SEDIMENT BASIN OR SPECIAL STILLING BASIN(S) AS STILLING BASIN WHERE APPLICABLE.

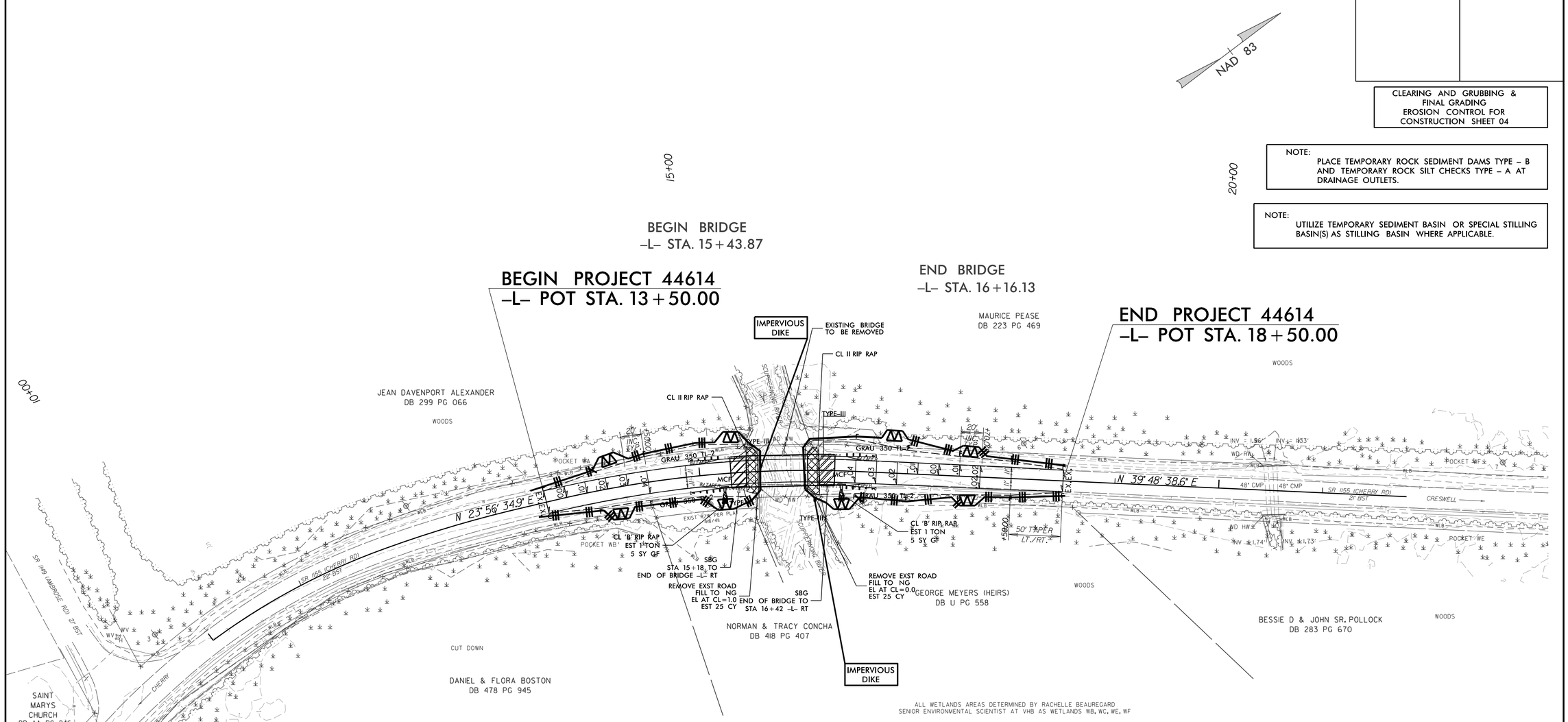

ALL WETLANDS AREAS DETERMINED BY RACHELLE BEAUREGARD
SENIOR ENVIRONMENTAL SCIENTIST AT VHB AS WETLANDS WB, WC, WE, WF

PARCEL AREA SUMMARY

PARCEL NO.	PROPERTY OWNER NAME	R/W AREA	TUE
1	JEAN DAVENPORT ALEXANDER	1745.51 SF	689.91 SF
2	MAURICE PEASE	1555.89 SF	5449.37 SF
3	GEORGE MEYERS (HEIRS)	1837.26 SF	

PROJECT REFERENCE NO.	SHEET NO.
44614	EC-2G
R/W SHEET NO.	
ROADWAY DESIGN ENGINEER	HYDRAULICS ENGINEER

COIR FIBER WATTLE DETAIL

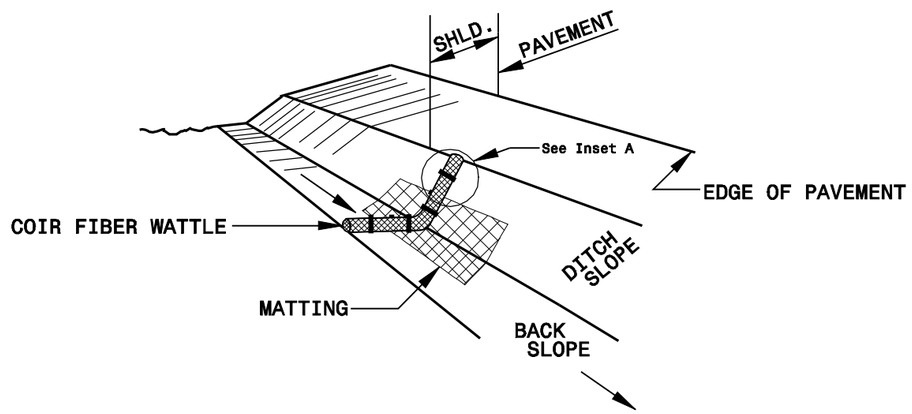

ISOMETRIC VIEW

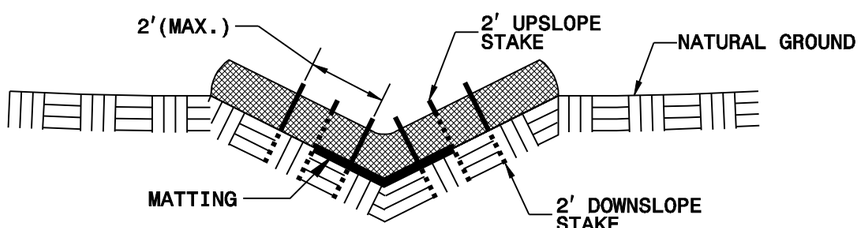

CROSS SECTION VEE DITCH

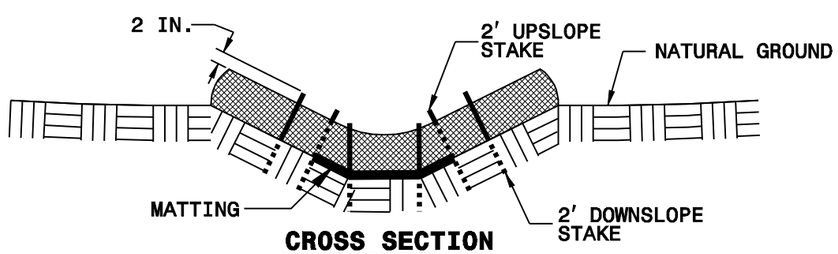

CROSS SECTION TRAPEZOIDAL DITCH

NOTES:

USE MINIMUM 12 IN. DIAMETER COIR FIBER (COCONUT FIBER) WATTLE.

USE 2 FT. WOODEN STAKES WITH A 2 IN. BY 2 IN. NOMINAL CROSS SECTION.

ONLY INSTALL WATTLE(S) TO A HEIGHT IN DITCH SO FLOW WILL NOT WASH AROUND WATTLE AND SCOUR DITCH SLOPES AND AS DIRECTED.

INSTALL A MINIMUM OF 2 UPSLOPE STAKES AND 4 DOWNSLOPE STAKES AT AN ANGLE TO WEDGE WATTLE TO BOTTOM OF DITCH.

PROVIDE STAPLES MADE OF 0.125 IN. DIAMETER STEEL WIRE FORMED INTO A U SHAPE NOT LESS THAN 12" IN LENGTH.

INSTALL STAPLES APPROXIMATELY EVERY 1 LINEAR FOOT ON BOTH SIDES OF WATTLE AND AT EACH END TO SECURE IT TO THE SOIL.

INSTALL MATTING IN ACCORDANCE WITH SECTION 1631 OF THE STANDARD SPECIFICATIONS.

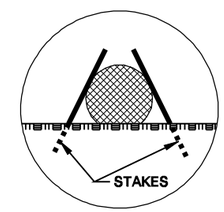

INSET A

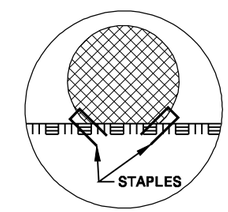

INSET B

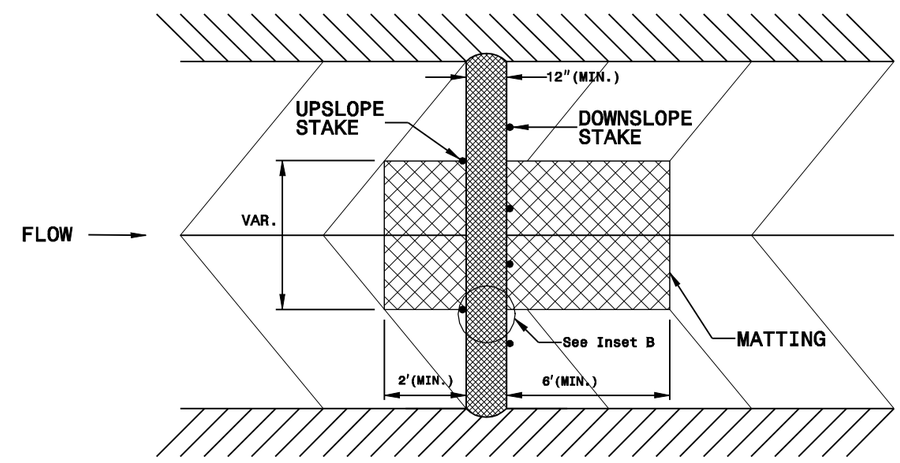

TOP VIEW

PROJECT REFERENCE NO.	SHEET NO.
44614	EC-2G
R/W SHEET NO.	
ROADWAY DESIGN ENGINEER	HYDRAULICS ENGINEER

SILT FENCE COIR FIBER WATTLE BREAK DETAIL

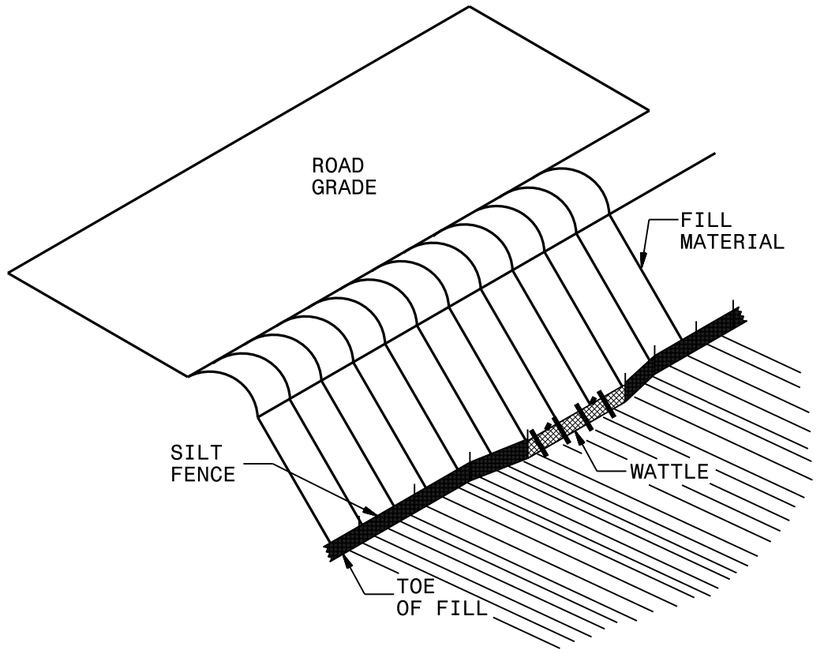

ISOMETRIC VIEW

NOTES:

USE MINIMUM 12 IN. DIAMETER COIR FIBER (COCONUT FIBER) WATTLE AND LENGTH OF 10 FT.

EXCAVATE A 1 TO 2 INCH TRENCH FOR WATTLE TO BE PLACED.

DO NOT PLACE WATTLE ON TOE OF SLOPE.

USE 2 FT. WOODEN STAKES WITH A 2 IN. BY 2 IN. NOMINAL CROSS SECTION.

INSTALL A MINIMUM OF 2 UPSLOPE STAKES AND 4 DOWNSLOPE STAKES AT AN ANGLE TO WEDGE WATTLE TO GROUND.

PROVIDE STAPLES MADE OF 0.125 IN. DIAMETER STEEL WIRE FORMED INTO A U SHAPE NOT LESS THAN 12″ IN LENGTH.

INSTALL STAPLES APPROXIMATELY EVERY 1 LINEAR FOOT ON BOTH SIDES OF WATTLE AND AT EACH END TO SECURE IT TO THE SOIL.

WATTLE INSTALLATION CAN BE ON OUTSIDE OF THE SILT FENCE AS DIRECTED.

INSTALL TEMPORARY SILT FENCE IN ACCORDANCE WITH SECTION 1605 OF THE STANDARD SPECIFICATIONS.

INSET A

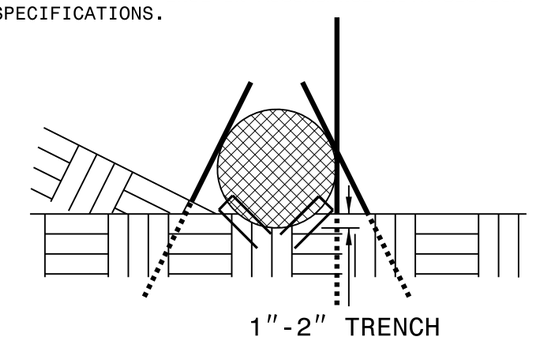

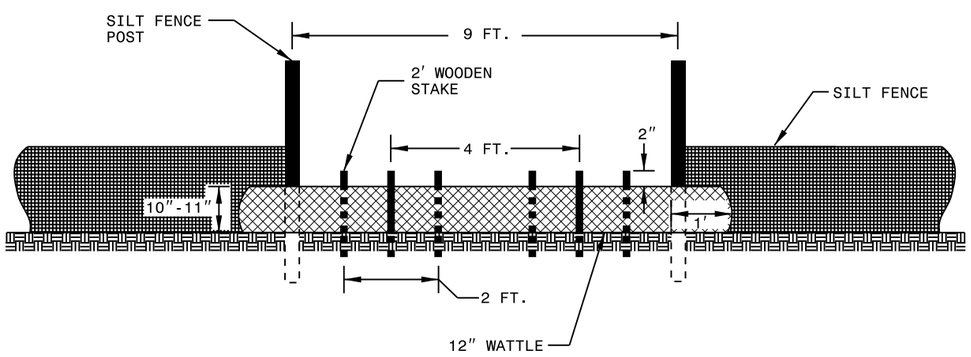

VIEW FROM SLOPE

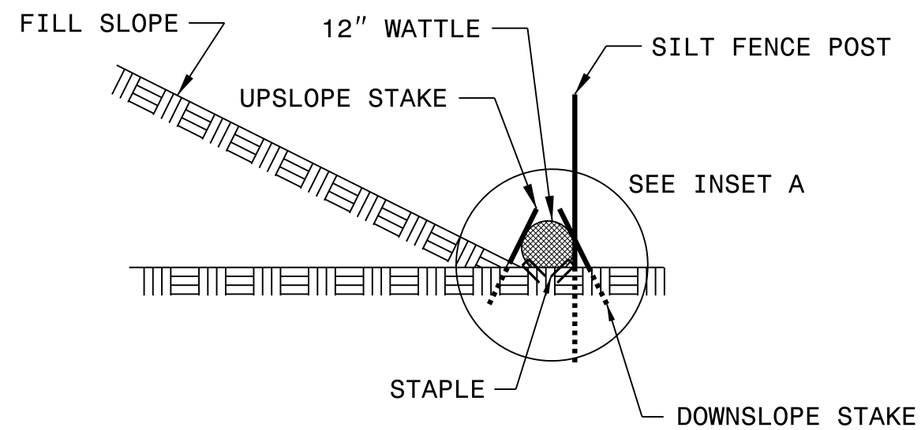

SIDE VIEW

PROJECT REFERENCE NO.	SHEET NO.
44614	EC-2H
R/W SHEET NO.	
ROADWAY DESIGN ENGINEER	HYDRAULICS ENGINEER

COIR FIBER WATTLE BARRIER DETAIL

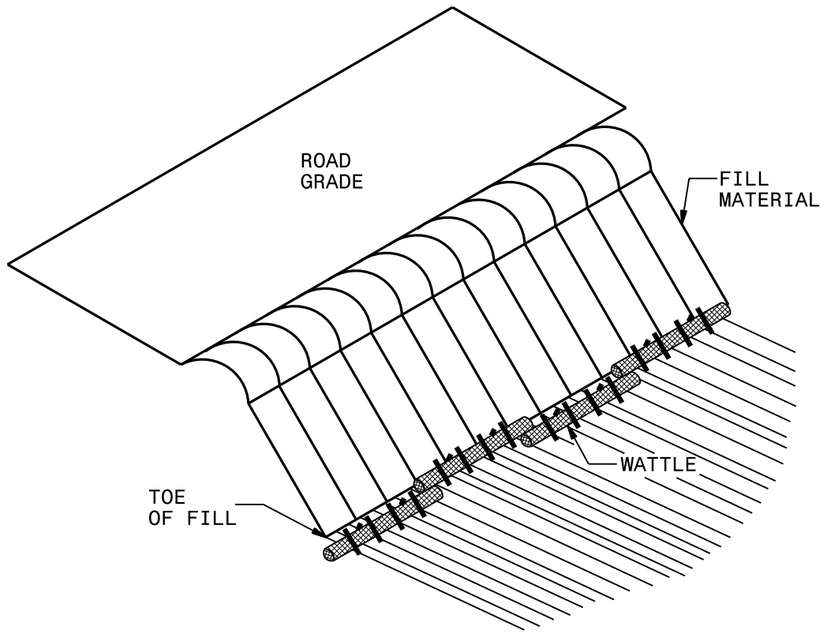

ISOMETRIC VIEW

NOTES:

USE MINIMUM 18 IN. NOMINAL DIAMETER COIR FIBER (COCONUT) WATTLE AND LENGTH OF 10 FT.

EXCAVATE A 2 TO 3 INCH TRENCH FOR WATTLE TO BE PLACED.

DO NOT PLACE WATTLES ON TOE OF SLOPE.

USE 2 FT. WOODEN STAKES WITH A 2 IN. BY 2 IN. NOMINAL CROSS SECTION.

INSTALL A MINIMUM OF 2 UPSLOPE STAKES AND 4 DOWNSLOPE STAKES AT AN ANGLE TO WEDGE WATTLE TO GROUND.

PROVIDE STAPLES MADE OF 0.125 IN. DIAMETER STEEL WIRE FORMED INTO A U SHAPE NOT LESS THAN 12″ IN LENGTH.

INSTALL STAPLES APPROXIMATELY EVERY 1 LINEAR FOOT ON BOTH SIDES OF WATTLE AND AT EACH END TO SECURE IT TO THE SOIL.

FOR BREAKS ALONG LARGE SLOPES, USE MAXIMUM SPACING OF 25 FT.

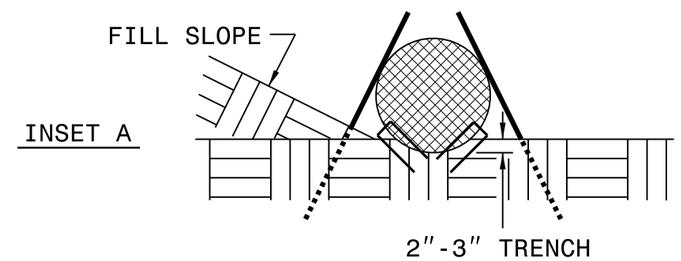

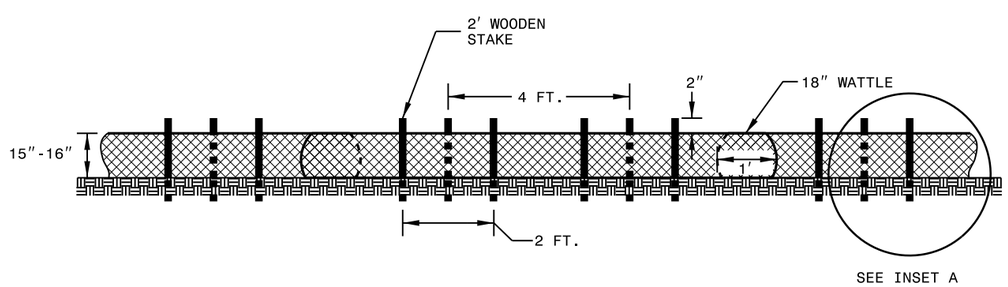

FRONT VIEW

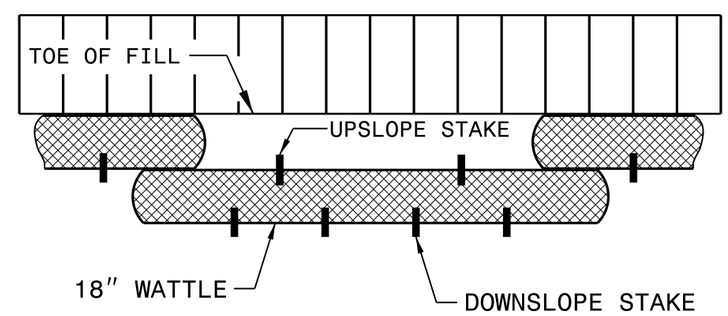

TOP VIEW

WITH LINER, NO GRAVEL APPROACH

ONSITE CONCRETE WASHOUT STRUCTURE WITH LINER

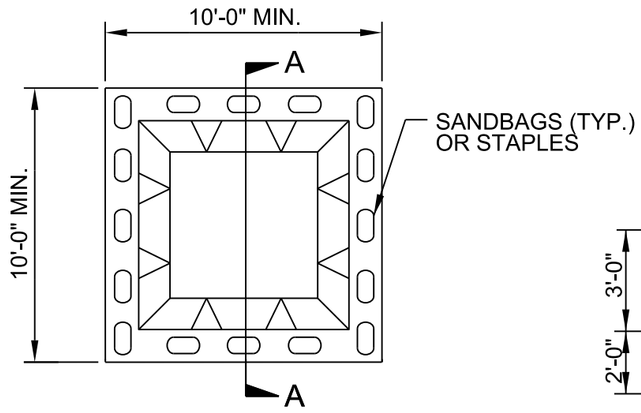

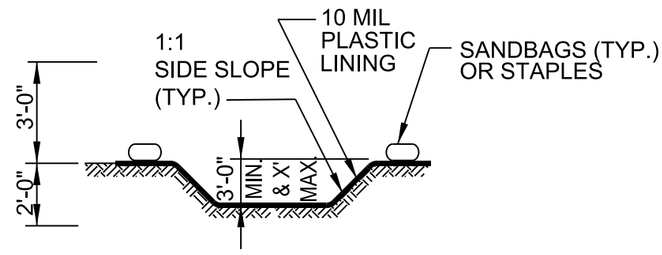

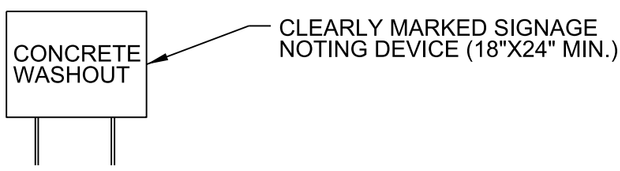

SECTION A-A

PLAN

NOTES:

1. ACTUAL LOCATION DETERMINED IN FIELD

2. THE CONCRETE WASHOUT STRUCTURES SHALL BE MAINTAINED WHEN THE LIQUID AND/OR SOLID REACHES 75% OF THE STRUCTURES CAPACITY.

3.CONCRETE WASHOUT STRUCTURE NEEDS TO BE CLEARY MARKED WITH SIGNAGE NOTING DEVICE.

BELOW GRADE WASHOUT STRUCTURE

NOT TO SCALE

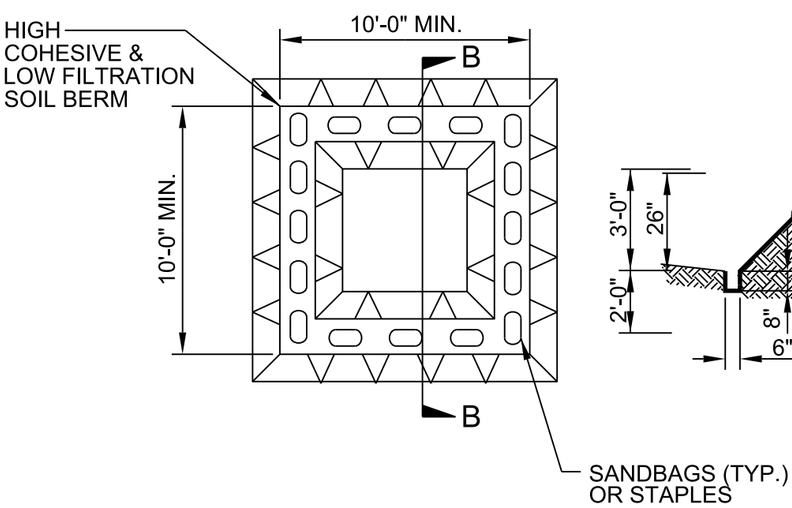

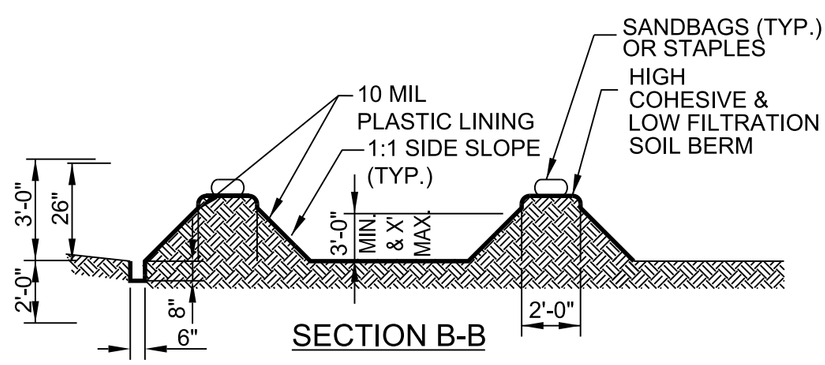

SECTION B-B

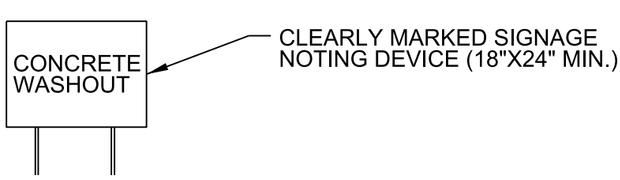

PLAN

NOTES:

1. ACTUAL LOCATION DETERMINED IN FIELD

2. THE CONCRETE WASHOUT STRUCTURES SHALL BE MAINTAINED WHEN THE LIQUID AND/OR SOLID REACHES 75% OF THE STRUCTURES CAPACITY TO PROVIDE ADEQUATE HOLDING CAPACITY WITH A MINIMUM 12 INCHES OF FREEBOARD.

3.CONCRETE WASHOUT STRUCTURE NEEDS TO BE CLEARY MARKED WITH SIGNAGE NOTING DEVICE.

ABOVE GRADE WASHOUT STRUCTURE

NOT TO SCALE

PRELIMINARY DESIGN
NOT FOR CONSTRUCTION

TIP NO.	SHEET NO.
44614	SIGN-1

APPROVED: _____

DATE: _____

SEAL

NORTH CAROLINA PROFESSIONAL SEAL 034343 ENGINEER A. MATTHEW THIGPEN

DOCUMENT NOT CONSIDERED FINAL UNLESS ALL SIGNATURES COMPLETED

STATE OF NORTH CAROLINA
DEPARTMENT OF TRANSPORTATION

SIGNING PLAN
WASHINGTON COUNTY

LOCATION: BRIDGE NO. 26 ON SR 1155 OVER THE SCUPPERNONG RIVER

ROADWAY STANDARD DRAWING

THE FOLLOWING ROADWAY STANDARDS AS APPEAR IN "ROADWAY STANDARD DRAWINGS" - PROJECT SERVICES UNIT - N.C. DEPARTMENT OF TRANSPORTATION - RALEIGH, N.C., DATED JANUARY 2018 ARE APPLICABLE TO THIS PROJECT AND BY REFERENCE HEREBY ARE CONSIDERED A PART OF THESE PLANS:

STD. NO. TITLE

PROJECT NOTES

1. DISPOSAL OF SIGN SYSTEM, U CHANNEL

GENERAL NOTES

- SIGNS FURNISHED BY STATE
- CONFIRM IN WRITING AT LEAST 4 MONTHS IN ADVANCE, THE ACTUAL DATE THE DEPARTMENT FURNISHED SIGNS WILL BE REQUIRED.
- ALL TYPE 'D' SIGNS SHALL BE MOUNTED ON TWO U-CHANNEL POSTS UNLESS OTHERWISE INDICATED ON THE PLANS.
- IF REMOVAL OR RELOCATION OF SIGNS ON PRIVATE STREET (NON-STATE MAINTAINED) IS REQUIRED DUE TO CONSTRUCTION, THE CONTRACTOR SHALL INFORM THE ENGINEER. THE WORK WILL BE COMPLETED BY OTHERS.
- WHEN NOT STATIONED OR DIMENSIONED ON PLANS, ALL 'E' AND 'F' SIGNS SHALL BE FIELD LOCATED BY THE ENGINEER
- ALL EXISTING SIGNS ON "U" CHANNEL POST WITHIN THE PROJECT LIMITS SHALL BE REMOVED AND DISPOSED OF UNLESS OTHERWISE NOTED ON PLANS.
- WHEN EXISTING SIGNS ARE REMOVED AND INSTALLED ON NEW SUPPORTS, THE RE-ERECTION SHALL IMMEDIATELY FOLLOW THE REMOVAL.
- THE BACKGROUND FOR TYPE E & F SIGNS SHALL BE TYPE C REFLECTIVE SHEETING.
- SEE ROADWAY PLANS FOR GUARD/GUIDE RAIL DETAILS.

SUMMARY OF QUANTITIES

ITEM NO.		ITEM DESCRIPTION	QUANTITY	UNIT
DESC. NO.	SECT. NO.			
4155000000	907	DISPOSAL OF SIGN SYSTEM, U-CHANNEL	4	EA.

INDEX

SHEET NO.	DESCRIPTION
SIGN-1	TITLE SHEET
SIGN-2	EXISTING SIGNS

PLAN PREPARED BY: VHB Engineering NC, P.C.

A. Matthew Thigpen, PE — Project Engineer

vhb
940 Main Campus Drive, Suite 500
Raleigh, NC 27606
P: (919) 829-0328
NC License No. C-3705

T.I.P.: 44614

CONTRACT:

TIP NO.	SHEET NO.
44614	SIGN-2

APPROVED: _____

DATE: _____

SEAL

NORTH CAROLINA PROFESSIONAL SEAL 034343 ENGINEER MATTHEW THIGPEN

DOCUMENT NOT CONSIDERED FINAL UNLESS ALL SIGNATURES COMPLETED

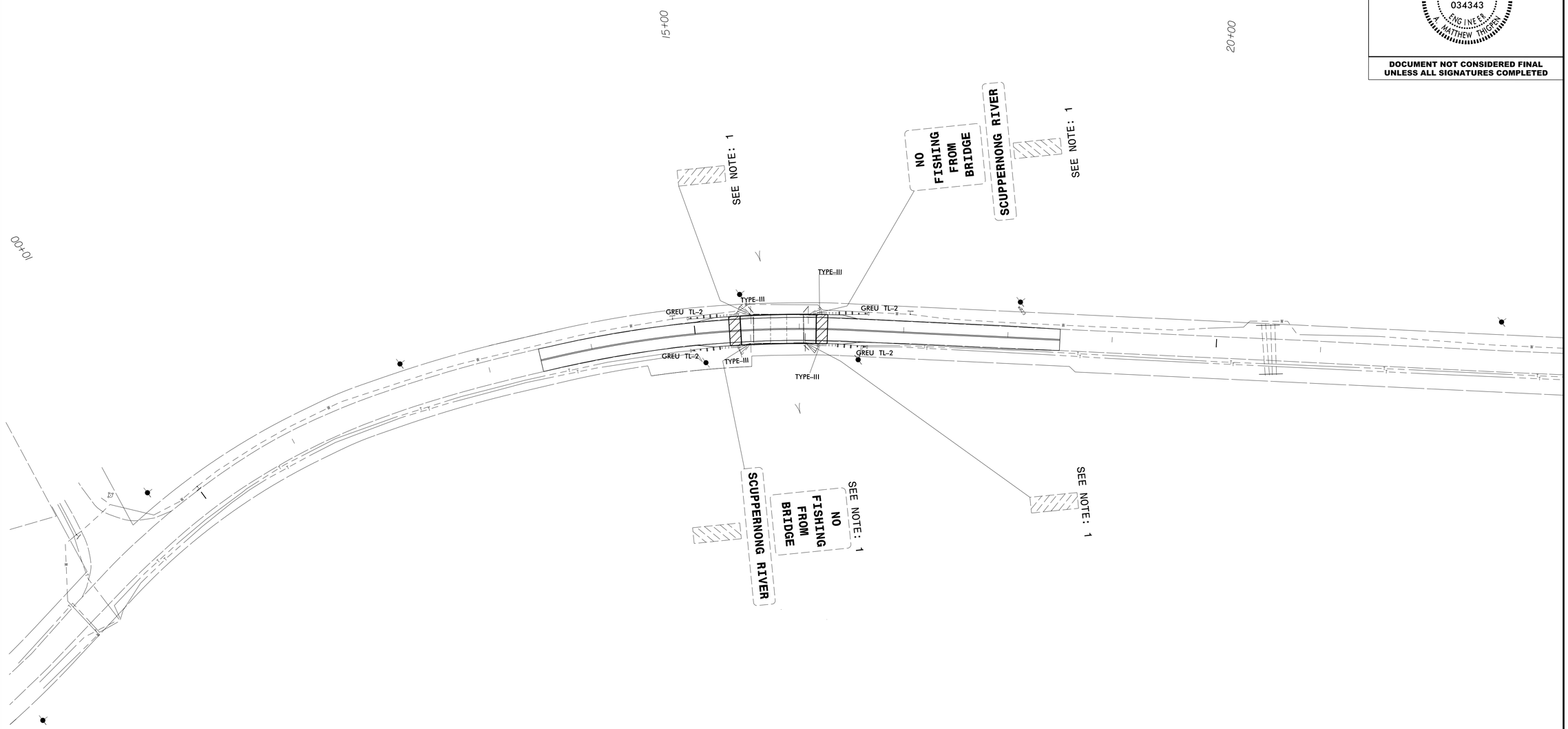

EXISTING SIGNS

2/12/2018
\\vhb\proj\Raleigh\38564.04 NCDOT 44614 Washington\NCDOT\Traffic\Signing\CADD\Signing Layout Plans\44614_sgn_psh04.dgn
User:mthigpen

PROJ. REFERENCE NO.	SHEET NO.
441614	X-1A

STATE OF NORTH CAROLINA
DIVISION OF HIGHWAYS

CROSS-SECTION SUMMARY

Station L	Uncl. Exc. (cu. yd.)	Embt (cu. yd.)
13+50.00	0	0
14+00.00	0	6
14+50.00	0	27
15+00.00	0	67
15+43.87	0	81

Station L	Uncl. Exc. (cu. yd.)	Embt (cu. yd.)
16+16.13	0	0
16+50.00	0	105
17+00.00	0	106
17+50.00	0	40
18+00.00	1	14
18+50.00	1	3

Approximate quantities only. Unclassified excavation, fine grading, clearing and grubbing, and removal of existing pavement will be paid for at the lump sum price for "Grading".

6/23/16

0 2.5 5	PROJ. REFERENCE NO.	SHEET NO.
	44614	X-1

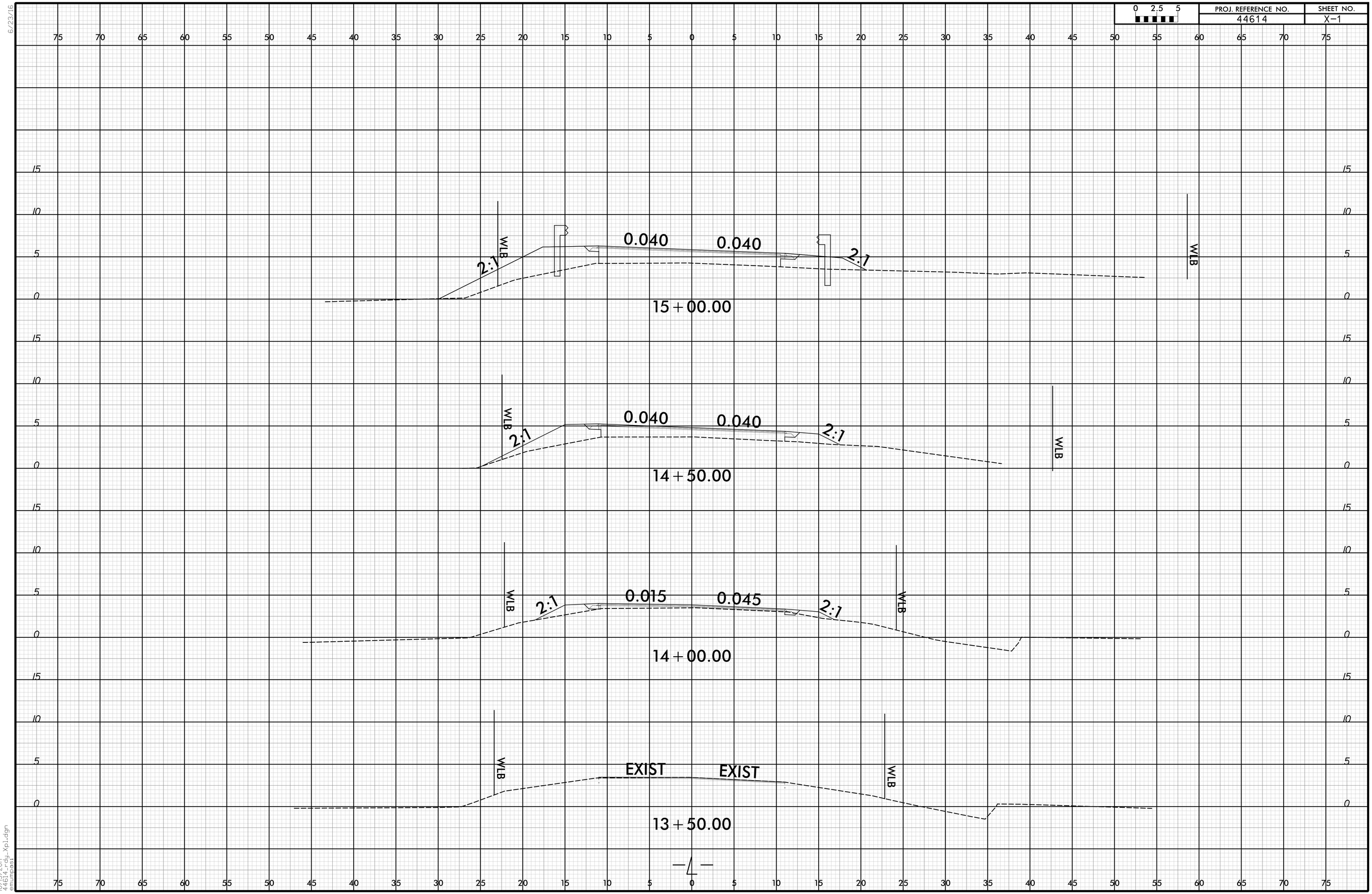

10/13/2017
44614_rdy_xpl.dgn
emunoz

0 2.5 5	PROJ. REFERENCE NO.	SHEET NO.
	44614	X-2

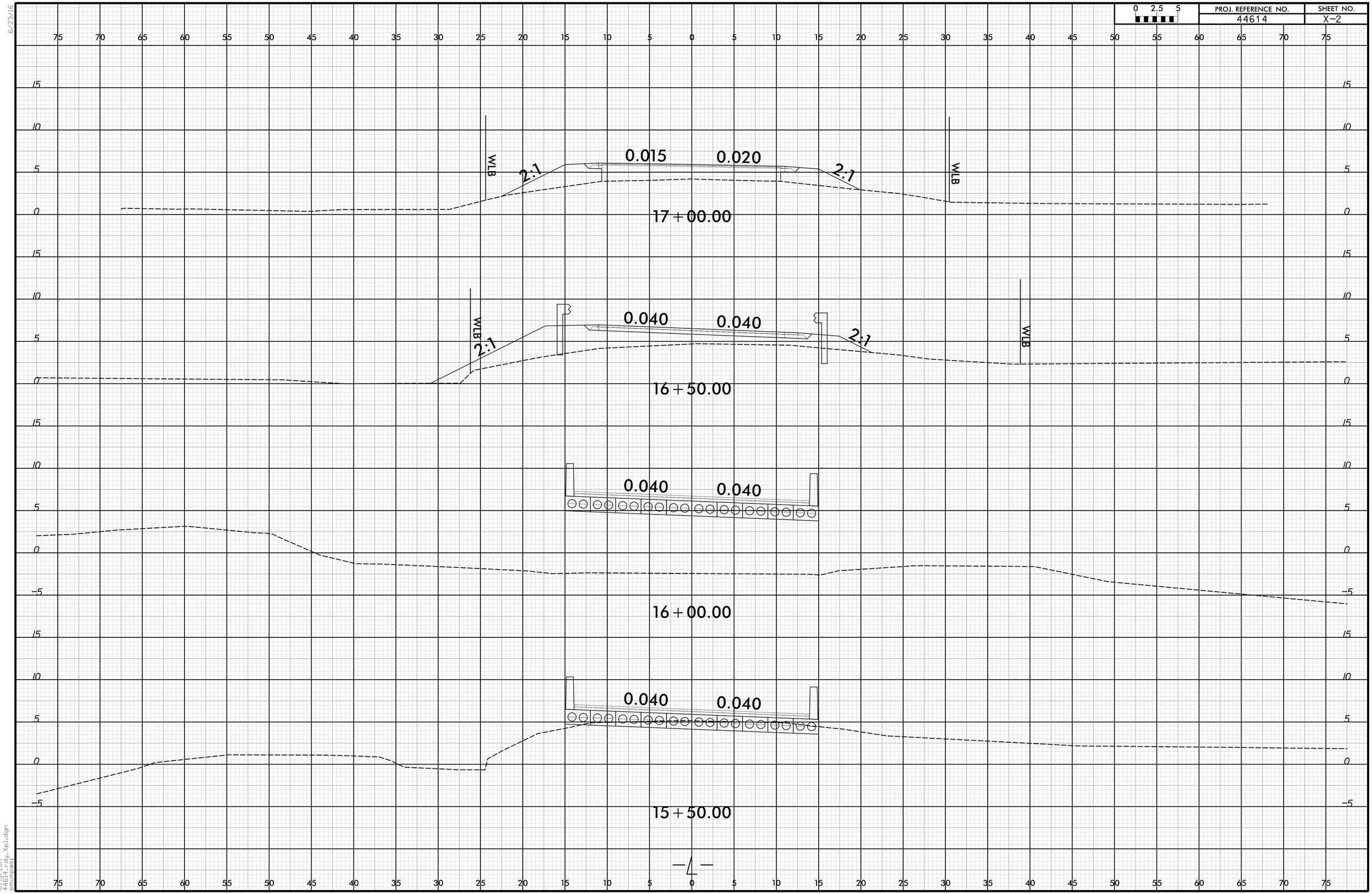

6/23/16

10/13/2017
44614_rdy_Xpl.dgn
emunipast

6/23/16

0 2.5 5	PROJ. REFERENCE NO.	SHEET NO.
	44614	X-3

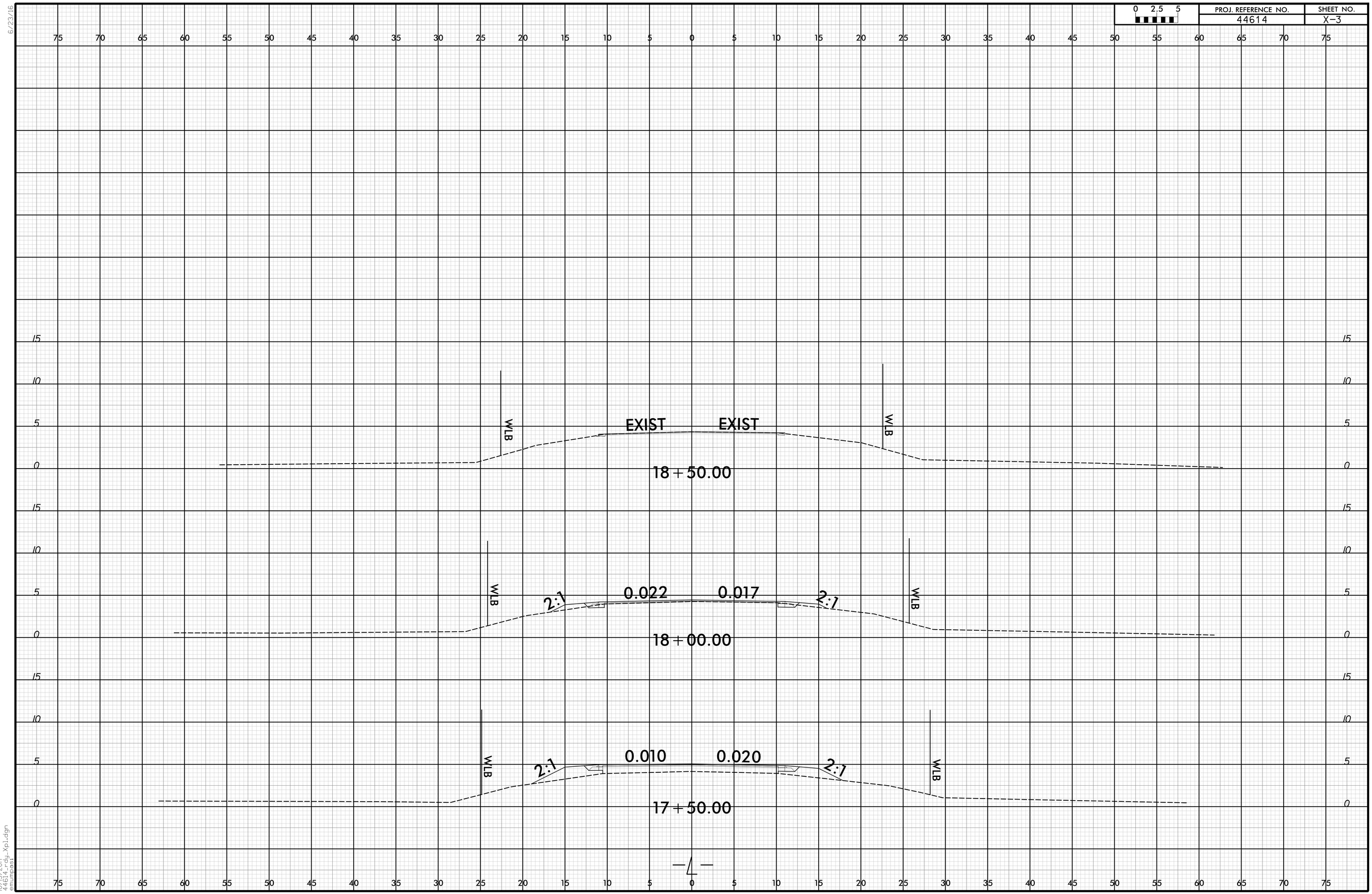

10/13/2017
44614_rdy_Xp1.dgn
emumpost

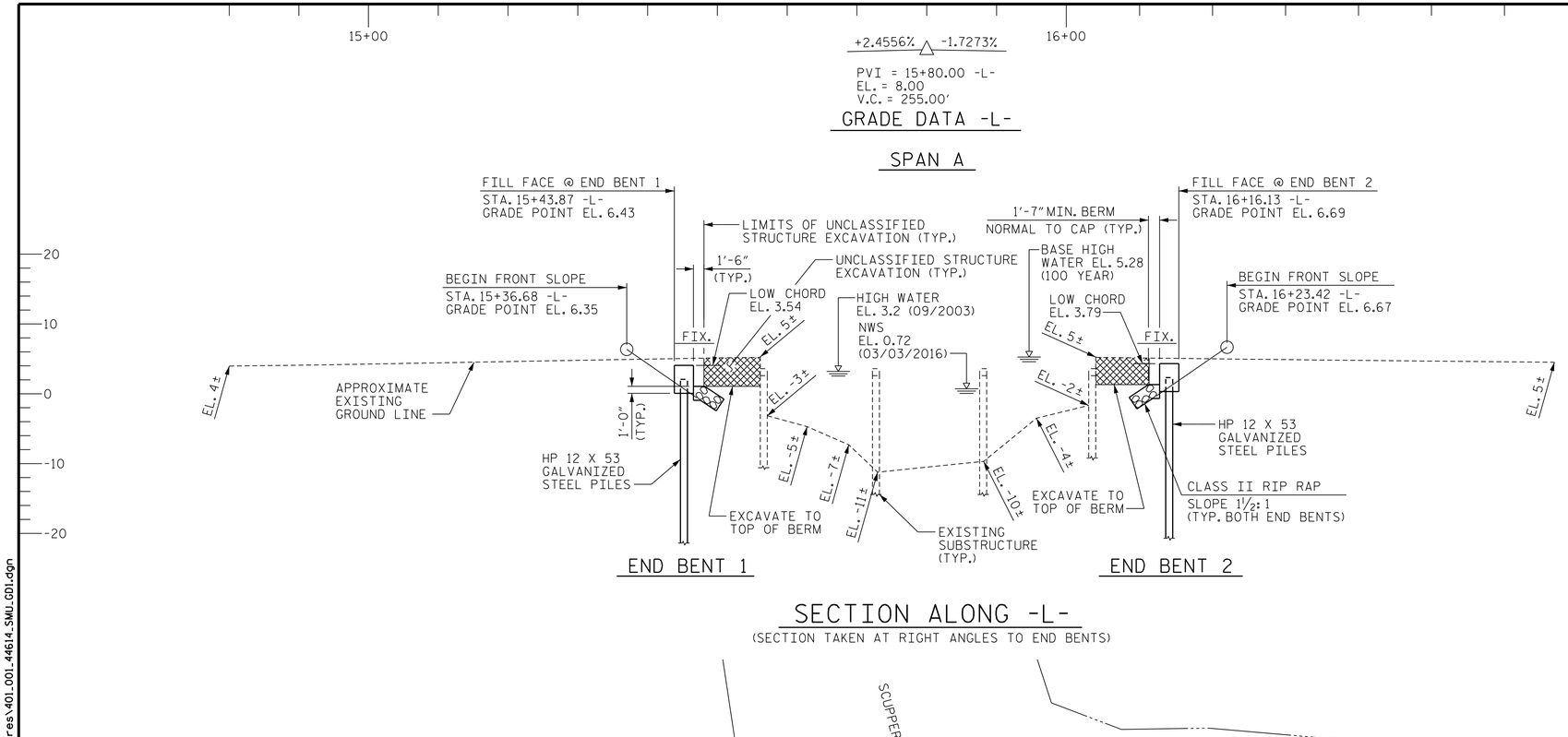

SECTION ALONG -L-

(SECTION TAKEN AT RIGHT ANGLES TO END BENTS)

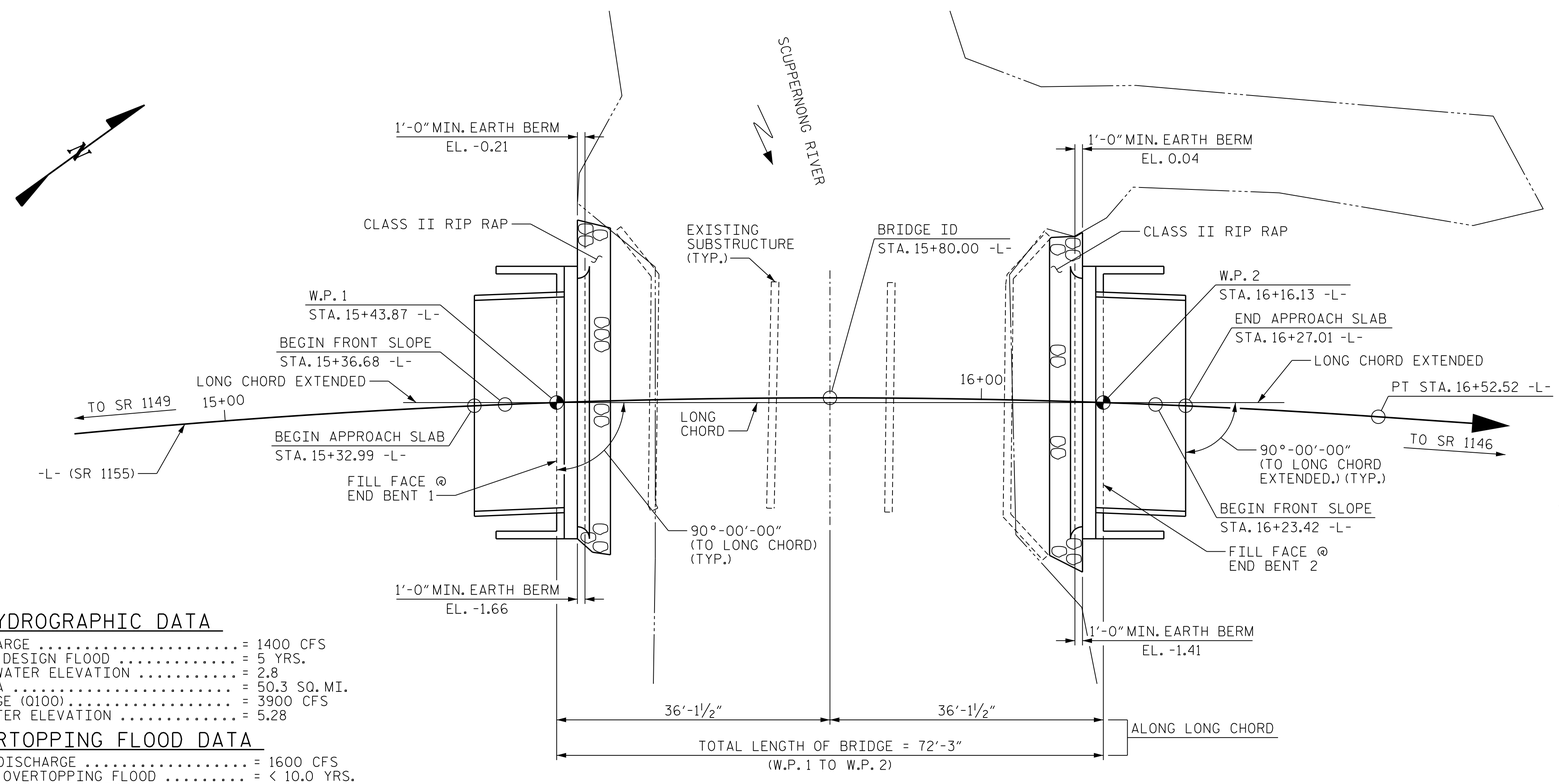

PLAN

(PILES NOT SHOWN FOR CLARITY)

I HEREBY CERTIFY THESE PLANS ARE THE AS-BUILT PLANS

HORIZ. CURVE DATA -L-

PI STA. 15+08.06 -L-
Δ = 15°52'03.6" (RT.)
D = 5°27'24.3"
L = 290.79'
T = 146.33'
R = 1050.00'

HYDROGRAPHIC DATA

DESIGN DISCHARGE	= 1400 CFS
FREQUENCY OF DESIGN FLOOD	= 5 YRS.
DESIGN HIGH WATER ELEVATION	= 2.8
DRAINAGE AREA	= 50.3 SQ. MI.
BASE DISCHARGE (Q100)	= 3900 CFS
BASE HIGH WATER ELEVATION	= 5.28

OVERTOPPING FLOOD DATA

OVERTOPPING DISCHARGE	= 1600 CFS
FREQUENCY OF OVERTOPPING FLOOD	= < 10.0 YRS.
OVERTOPPING FLOOD ELEVATION	= 3.0

PROJECT NO. 44614
WASHINGTON COUNTY
STATION: 15+80.00 -L-

SHEET 1 OF 2 REPLACES BRIDGE NO. 26

NORTH CAROLINA PROFESSIONAL SEAL 24939 ENGINEER BYRON E. ATKINSON
12/19/2017

DOCUMENT NOT CONSIDERED FINAL UNLESS ALL SIGNATURES COMPLETED

STATE OF NORTH CAROLINA
DEPARTMENT OF TRANSPORTATION
RALEIGH

GENERAL DRAWING

FOR BRIDGE ON SR 1155 OVER SCUPPERNONG RIVER BETWEEN SR 1149 AND SR 1146

MI ENGINEERING
1011 SCHAUB DRIVE, SUITE 100
RALEIGH, NC 27606
(919) 851-6606
FIRM PE NUMBER : P-0671

REVISIONS								SHEET NO.
NO.	BY:	DATE:	NO.	BY:	DATE:			S-1
1			3					TOTAL SHEETS
2			4					13

DRAWN BY :	B.E. LANNING	DATE :	06/17
CHECKED BY :	B.E. ATKINSON	DATE :	06/17
DESIGN ENGINEER OF RECORD :	B.E. ATKINSON	DATE :	06/17

12/19/2017
2:30:31 PM
User: blanning
Filename: P:\NC Bridges\MI6003_VHB_Div. 1 Br. Repl. (4 Bridges)\MI6003.01_Washington 26_SPN 44614\44614\Structures\401_001_44614_SMU_G01.dgn

B.M. #1: R/R SPIKE IN BASE OF 18" GUM TREE; 30.20' RT. OF STA. 20+10.00 -L-, EL. 2.46

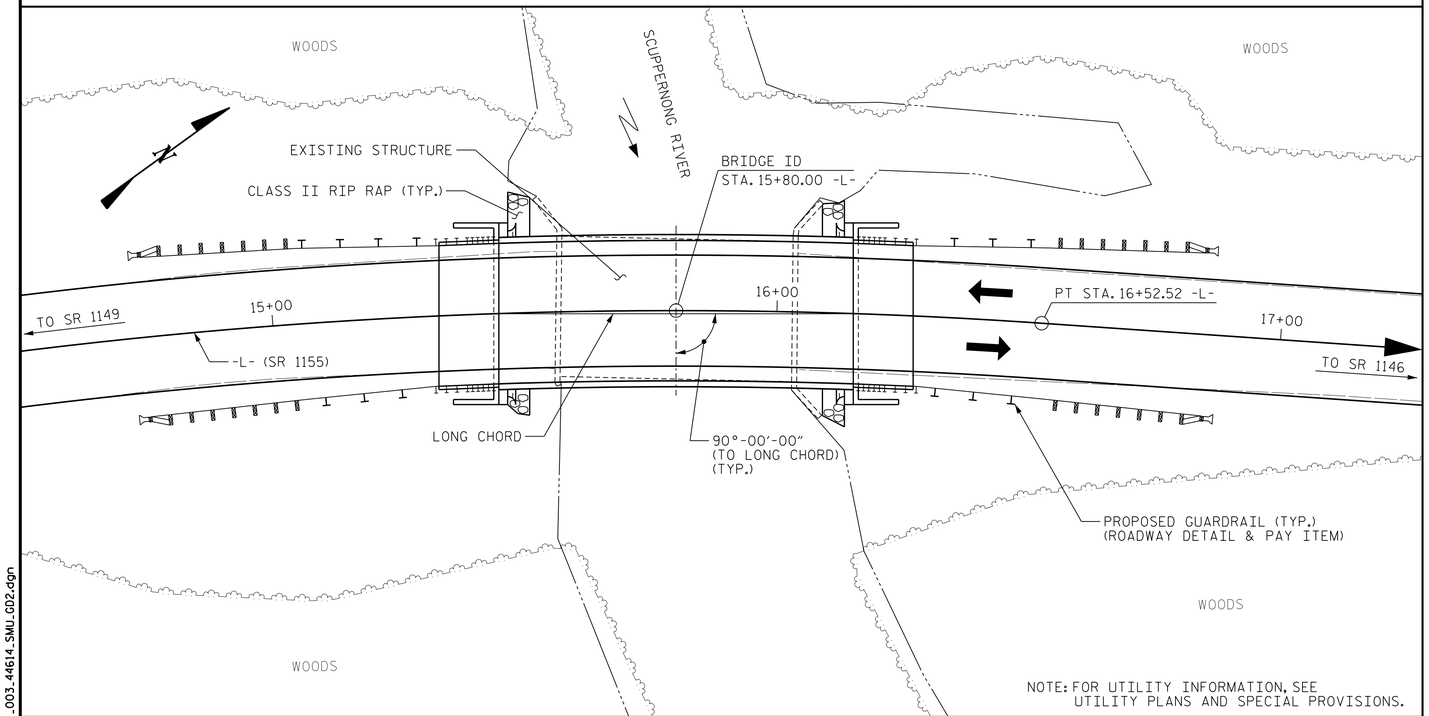

LOCATION SKETCH

NOTES

ASSUMED LIVE LOAD = HL-93 OR ALTERNATE LOADING.

THIS BRIDGE HAS BEEN DESIGNED IN ACCORDANCE WITH THE AASHTO LRFD BRIDGE DESIGN SPECIFICATIONS.

THIS BRIDGE IS LOCATED IN SEISMIC ZONE 1.

THIS STRUCTURE CONTAINS THE NECESSARY CORROSION PROTECTION REQUIRED FOR A CORROSIVE SITE.

FOR OTHER DESIGN DATA AND GENERAL NOTES, SEE SHEET SN.

FOR EROSION CONTROL MEASURES SEE EROSION CONTROL PLANS.

THE EXISTING STRUCTURE CONSISTING OF THREE SPANS @ 16'-0", WITH A REINFORCED CONCRETE FLOOR ON TIMBER JOISTS AND A CLEAR ROADWAY WIDTH OF 28'-0" ON TIMBER CAP WITH TIMBER PILES END BENTS AND LOCATED AT THE SITE OF THE PROPOSED STRUCTURE SHALL BE REMOVED. THE EXISTING BRIDGE IS PRESENTLY NOT POSTED FOR LOAD LIMIT.

REMOVAL OF THE EXISTING BRIDGE SHALL BE PERFORMED SO AS TO NOT ALLOW DEBRIS TO FALL INTO THE WATER. THE CONTRACTOR SHALL SUBMIT DEMOLITION PLANS FOR REVIEW AND REMOVE THE BRIDGE IN ACCORDANCE WITH ARTICLE 402-2 OF THE STANDARD SPECIFICATIONS.

THE MATERIAL SHOWN IN THE CROSS-HATCHED AREA ON SHEET S-1 SHALL BE EXCAVATED FOR A DISTANCE OF 25 FT. EACH SIDE OF THE CENTERLINE ROADWAY AS DIRECTED BY THE ENGINEER. THIS WORK WILL BE PAID FOR AT THE CONTRACT LUMP SUM PRICE FOR UNCLASSIFIED STRUCTURE EXCAVATION. SEE SECTION 412 OF THE STANDARD SPECIFICATIONS.

THE SUBSTRUCTURE OF THE EXISTING BRIDGE INDICATED ON THE PLANS IS FROM THE BEST INFORMATION AVAILABLE. THIS INFORMATION IS SHOWN FOR THE CONVENIENCE OF THE CONTRACTOR. THE CONTRACTOR SHALL HAVE NO CLAIM WHATSOEVER AGAINST THE DEPARTMENT OF TRANSPORTATION FOR ANY DELAYS OR ADDITIONAL COST INCURRED BASED ON THE DIFFERENCES BETWEEN THE EXISTING BRIDGE SUBSTRUCTURE SHOWN ON THE PLANS AND THE ACTUAL CONDITIONS AT THE PROJECT SITE.

ASPHALT WEARING SURFACE IS INCLUDED IN THE ROADWAY QUANTITY. SEE ROADWAY QUANTITIES.

THIS STRUCTURE HAS BEEN DESIGNED IN ACCORDANCE WITH "HEC 18 - EVALUATING SCOUR AT BRIDGES".

FOR SUBMITTAL OF WORKING DRAWINGS, SEE SPECIAL PROVISIONS.

FOR FALSEWORK AND FORMWORK, SEE SPECIAL PROVISIONS.

FOR CRANE SAFETY, SEE SPECIAL PROVISIONS.

FOR GROUT FOR STRUCTURES, SEE SPECIAL PROVISIONS.

FOR ASBESTOS ASSESSMENT, SEE SPECIAL PROVISIONS.

AT THE CONTRACTOR'S OPTION, PRESTRESSED CONCRETE END BENT CAPS MAY BE SUBSTITUTED IN PLACE OF THE CAST-IN-PLACE CAPS. THE CONTRACTOR SHALL COORDINATE WITH THE RESIDENT ENGINEER TO RECEIVE REVISED PLANS AND DETAILS FROM THE STRUCTURES MANAGEMENT UNIT. THE REDESIGN AND ADDITIONAL MATERIALS NEEDED WILL BE AT NO ADDITIONAL COST TO THE CONTRACTOR.

ALL METALLIZED SURFACES SHALL RECEIVE A SEAL COATING AS SPECIFIED IN THE SPECIAL PROVISION FOR THERMAL SPRAYED COATINGS (METALLIZATION).

CLASS AA CONCRETE SHALL BE USED IN ALL CAST-IN-PLACE END BENT CAPS, AND SHALL CONTAIN CALCIUM NITRATE CORROSION INHIBITOR IN ACCORDANCE WITH THE STANDARD SPECIFICATIONS.

ALL BAR SUPPORTS IN THE VERTICAL CONCRETE BARRIER RAIL, END BENT CAPS AND ALL INCIDENTAL REINFORCING STEEL SHALL BE EPOXY COATED IN ACCORDANCE WITH THE STANDARD SPECIFICATIONS.

FOR PILES, SEE GEOTECHNICAL SPECIAL PROVISIONS AND SECTION 450 OF THE STANDARD SPECIFICATIONS.

PILES AT END BENT 1 AND END BENT 2 ARE DESIGNED FOR A FACTORED RESISTANCE OF 100 TONS PER PILE.

DRIVE PILES AT END BENT 1 AND END BENT 2 TO A REQUIRED DRIVING RESISTANCE OF 170 TONS PER PILE.

TOTAL BILL OF MATERIAL

	REMOVAL OF EXISTING STRUCTURE	ASBESTOS ASSESSMENT	UNCLASSIFIED STRUCTURE EXCAVATION	CLASS AA CONCRETE	BRIDGE APPROACH SLABS	EPOXY COATED REINFORCING STEEL	PILE DRIVING EQUIPMENT SETUP FOR HP 12 X 53 GALVANIZED STEEL PILES	HP 12 X 53 GALVANIZED STEEL PILES		PILE REDRIVES	VERTICAL CONCRETE BARRIER RAIL	RIP RAP CLASS II (2'-0" THICK)	GEOTEXTILE FOR DRAINAGE	ELASTOMERIC BEARINGS	3'-0" x 2'-0" PRESTRESSED CONCRETE CORED SLABS	
	LUMP SUM	LUMP SUM	LUMP SUM	CU. YDS.	LUMP SUM	LBS.	EACH	NO.	LIN. FT.	EACH	LIN. FT.	TON	SQ. YDS.	LUMP SUM	NO.	LIN. FT.
SUPERSTRUCTURE					LUMP SUM						140.25			LUMP SUM	10	700.00
END BENT 1			LUMP SUM	20.2		2424	5	5	360	5		22	24			
END BENT 2			LUMP SUM	20.2		2424	5	5	360	5		22	24			
TOTAL	LUMP SUM	LUMP SUM	LUMP SUM	40.4	LUMP SUM	4848	10	10	720	10	140.25	44	48	LUMP SUM	10	700.00

PROJECT NO. 44614

WASHINGTON COUNTY

STATION: 15+80.00 -L-

SHEET 2 OF 2

NORTH CAROLINA PROFESSIONAL ENGINEER SEAL 24939 ENGINEER BYRON E. ATKINSON

12/19/2017

DOCUMENT NOT CONSIDERED FINAL UNLESS ALL SIGNATURES COMPLETED

MI ENGINEERING
1011 SCHAUB DRIVE, SUITE 100
RALEIGH, NC 27606
(919) 851-6606
FIRM PE NUMBER : P-0671

STATE OF NORTH CAROLINA
DEPARTMENT OF TRANSPORTATION
RALEIGH

GENERAL DRAWING

FOR BRIDGE ON SR 1155
OVER SCUPPERNONG RIVER
BETWEEN SR 1149 AND SR 1146

REVISIONS						SHEET NO.
NO.	BY:	DATE:	NO.	BY:	DATE:	S-2
1			3			TOTAL SHEETS
2			4			13

DRAWN BY : B.E. LANNING DATE : 06/17
CHECKED BY : B.E. ATKINSON DATE : 06/17
DESIGN ENGINEER OF RECORD : B.E. ATKINSON DATE : 06/17

LOAD AND RESISTANCE FACTOR RATING (LRFD) SUMMARY FOR PRESTRESSED CONCRETE GIRDERS

LEVEL		VEHICLE	WEIGHT (W) (TONS)	CONTROLLING LOAD RATING	MINIMUM RATING FACTORS (RF)	TONS = W X RF	STRENGTH I LIMIT STATE											SERVICE III LIMIT STATE						COMMENT NUMBER
							LIVELOAD FACTORS	MOMENT					SHEAR					LIVELOAD FACTORS	MOMENT					
								DISTRIBUTION FACTORS (DF)	RATING FACTOR	SPAN	GIRDER LOCATION	DISTANCE FROM LEFT END OF SPAN (ft)	DISTRIBUTION FACTORS (DF)	RATING FACTOR	SPAN	GIRDER LOCATION	DISTANCE FROM LEFT END OF SPAN (ft)		DISTRIBUTION FACTORS (DF)	RATING FACTOR	SPAN	GIRDER LOCATION	DISTANCE FROM LEFT END OF SPAN (ft)	
DESIGN LOAD RATING		HL-93(Inv)	N/A	1	1.006	--	1.75	0.273	1.03	70'	EL	34.5	0.507	1.32	70'	EL	6.9	0.80	0.273	**1.01**	70'	EL	**34.5**	
		HL-93(Opr)	N/A	--	1.341	--	1.35	0.273	1.34	70'	EL	34.5	0.507	1.72	70'	EL	6.9	N/A	--	--	--	--	--	
		HS-20(Inv)	36.000	2	1.306	47.02	1.75	0.273	1.34	70'	EL	34.5	0.507	1.65	70'	EL	6.9	0.80	0.273	**1.31**	70'	EL	**34.5**	
		HS-20(Opr)	36.000	--	1.74	62.64	1.35	0.273	1.74	70'	EL	34.5	0.507	2.14	70'	EL	6.9	N/A	--	--	--	--	--	
LEGAL LOAD RATING	SV	SNSH	13.500	--	2.917	39.379	1.4	0.273	3.75	70'	EL	34.5	0.507	4.87	70'	EL	6.9	0.80	0.273	2.92	70'	EL	34.5	
		SNGARBS2	20.000	--	2.187	43.741	1.4	0.273	2.81	70'	EL	34.5	0.507	3.47	70'	EL	6.9	0.80	0.273	2.19	70'	EL	34.5	
		SNAGRIS2	22.000	--	2.077	45.69	1.4	0.273	2.67	70'	EL	34.5	0.507	3.23	70'	EL	6.9	0.80	0.273	2.08	70'	EL	34.5	
		SNCOTTS3	27.250	--	1.452	39.565	1.4	0.273	1.87	70'	EL	34.5	0.507	2.43	70'	EL	6.9	0.80	0.273	1.45	70'	EL	34.5	
		SNAGGRS4	34.925	--	1.218	42.554	1.4	0.273	1.57	70'	EL	34.5	0.507	2.03	70'	EL	6.9	0.80	0.273	1.22	70'	EL	34.5	
		SNS5A	35.550	--	1.191	42.346	1.4	0.273	1.53	70'	EL	34.5	0.507	2.06	70'	EL	6.9	0.80	0.273	1.19	70'	EL	34.5	
		SNS6A	39.950	--	1.095	43.747	1.4	0.273	1.41	70'	EL	34.5	0.507	1.88	70'	EL	6.9	0.80	0.273	1.10	70'	EL	34.5	
		SNS7B	42.000	--	1.043	43.801	1.4	0.273	1.34	70'	EL	34.5	0.507	1.85	70'	EL	6.9	0.80	0.273	1.04	70'	EL	34.5	
	TTST	TNAGRIT3	33.000	--	1.336	44.087	1.4	0.273	1.72	70'	EL	34.5	0.507	2.23	70'	EL	6.9	0.80	0.273	1.34	70'	EL	34.5	
		TNT4A	33.075	--	1.342	44.401	1.4	0.273	1.72	70'	EL	34.5	0.507	2.17	70'	EL	6.9	0.80	0.273	1.34	70'	EL	34.5	
		TNT6A	41.600	--	1.1	45.746	1.4	0.273	1.41	70'	EL	34.5	0.507	1.98	70'	EL	6.9	0.80	0.273	1.10	70'	EL	34.5	
		TNT7A	42.000	--	1.106	46.462	1.4	0.273	1.42	70'	EL	34.5	0.507	1.94	70'	EL	6.9	0.80	0.273	1.11	70'	EL	34.5	
		TNT7B	42.000	--	1.147	48.18	1.4	0.273	1.47	70'	EL	34.5	0.507	1.8	70'	EL	6.9	0.80	0.273	1.15	70'	EL	34.5	
		TNAGRIT4	43.000	--	1.089	46.838	1.4	0.273	1.4	70'	EL	34.5	0.507	1.74	70'	EL	6.9	0.80	0.273	1.09	70'	EL	34.5	
		TNAGT5A	45.000	--	1.026	46.175	1.4	0.273	1.32	70'	EL	34.5	0.507	1.74	70'	EL	6.9	0.80	0.273	1.03	70'	EL	34.5	
		TNAGT5B	45.000	3	1.013	45.579	1.4	0.273	1.3	70'	EL	34.5	0.507	1.66	70'	EL	6.9	0.80	0.273	**1.01**	70'	EL	**34.5**	

LOAD FACTORS:

DESIGN LOAD RATING FACTORS	LIMIT STATE	γ_{DC}	γ_{DW}
	STRENGTH I	1.25	1.50
	SERVICE III	1.00	1.00

NOTES:

MINIMUM RATING FACTORS ARE BASED ON THE STRENGTH I AND SERVICE III LIMIT STATES.

ALLOWABLE STRESSES FOR SERVICE III LIMIT STATE ARE AS REQUIRED FOR DESIGN.

COMMENTS:

1.
2.
3.
4.

(#) CONTROLLING LOAD RATING

(1) DESIGN LOAD RATING (HL-93)

(2) DESIGN LOAD RATING (HS-20)

(3) LEGAL LOAD RATING **

** SEE CHART FOR VEHICLE TYPE

GIRDER LOCATION

I - INTERIOR GIRDER
EL - EXTERIOR LEFT GIRDER
ER - EXTERIOR RIGHT GIRDER

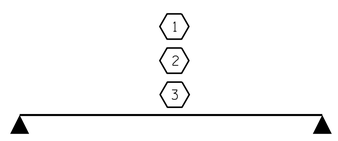

LRFR SUMMARY

FOR SPAN 'A'

PROJECT NO. 44614

WASHINGTON COUNTY

STATION: 15+80.00 -L-

NORTH CAROLINA PROFESSIONAL SEAL 24939 ENGINEER BYRON E. ATKINSON

12/19/2017

DOCUMENT NOT CONSIDERED FINAL UNLESS ALL SIGNATURES COMPLETED

MI ENGINEERING
1011 SCHAUB DRIVE, SUITE 100
RALEIGH, NC 27606
(919) 851-6606
FIRM PE NUMBER : P-0671

STATE OF NORTH CAROLINA
DEPARTMENT OF TRANSPORTATION
RALEIGH

STANDARD
LRFR SUMMARY FOR
70' CORED SLAB UNIT
90° SKEW
(NON-INTERSTATE TRAFFIC)

REVISIONS						SHEET NO.
NO.	BY:	DATE:	NO.	BY:	DATE:	S-3
1			3			TOTAL SHEETS
2			4			13

ASSEMBLED BY: B.E. LANNING DATE: 01/17
CHECKED BY : B.E. ATKINSON DATE: 02/17
DESIGN ENGINEER OF RECORD: B.E. ATKINSON DATE: 06/17

DRAWN BY : CVC 6/10
CHECKED BY : DNS 6/10

12/19/2017
2:30:56 PM
User: blanning
Filename: P:\NC Bridges\MI6003_VHB_Div.1 Br. Repl.(4 Bridges)\MI6003.01_Washington 26_SPN 44614\44614\Structures\401.005_44614_SMU_LRFR1.dgn

STD. NO. 24LRFR1_90S_70L

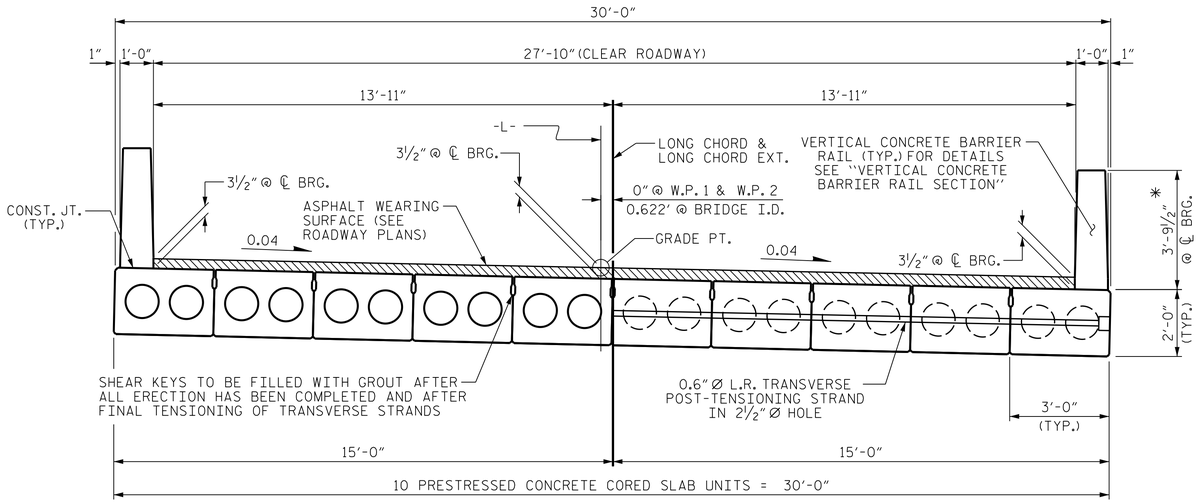

HALF SECTION
THROUGH VOIDS

TYPICAL SECTION

HALF SECTION
AT INTERMEDIATE DIAPHRAGMS

* - THE MAXIMUM BARRIER RAIL HEIGHT AND ASPHALT THICKNESS IS SHOWN. THE HEIGHT OF THE BARRIER RAIL AND ASPHALT THICKNESS VARIES WHILE THE TOP OF THE BARRIER RAIL FOLLOWS THE PROFILE OF THE GUTTERLINE. FOR RAIL HEIGHT DETAILS AND ASPHALT THICKNESS, SEE THE "VERTICAL CONCRETE BARRIER RAIL SECTION" DETAIL.

FIXED END

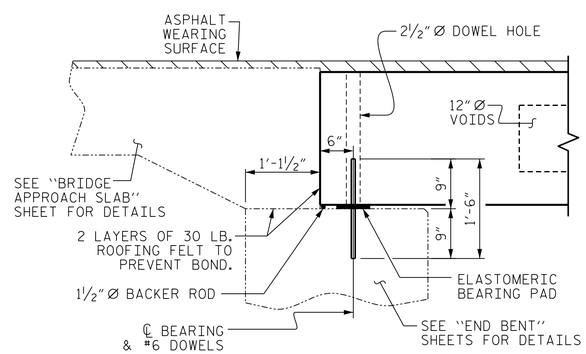

SECTION AT END BENT

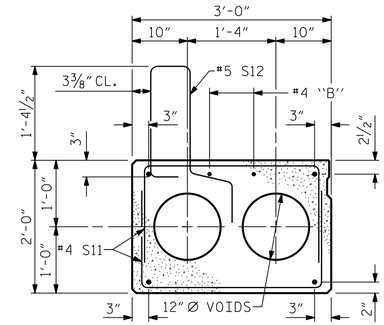

EXTERIOR SLAB SECTION

(FOR PRESTRESSED STRAND LAYOUT, SEE INTERIOR SLAB SECTION.)

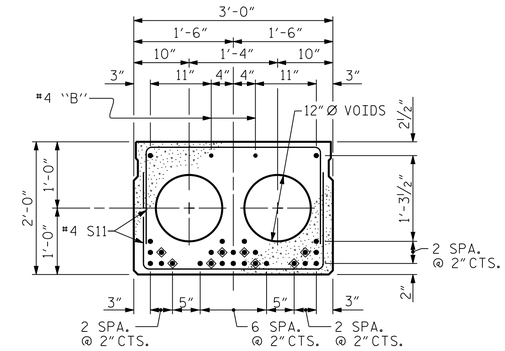

INTERIOR SLAB SECTION (70' UNIT)

(28 STRANDS REQUIRED)

0.6'' Ø LOW RELAXATION STRAND LAYOUT

◈ BOND SHALL BE BROKEN ON THESE STRANDS FOR A DISTANCE OF 12'-0" FROM END OF CORED SLAB UNIT. SEE STANDARD SPECIFICATIONS, ARTICLE 1078-7.

DEBONDING LEGEND

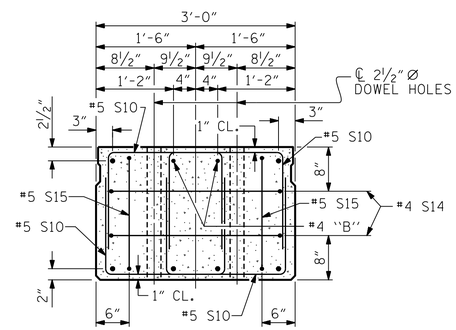

END ELEVATION

SHOWING PLACEMENT OF DOUBLE STIRRUPS AND LOCATION OF DOWEL HOLES. (STRAND LAYOUT NOT SHOWN.) INTERIOR SLAB UNIT SHOWN-EXTERIOR SLAB UNIT SIMILAR EXCEPT SHEAR KEY LOCATION.

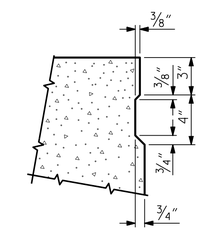

SHEAR KEY DETAIL

NOTE: OMIT SHEAR KEY ON OUTSIDE FACE OF EXTERIOR CORED SLABS.

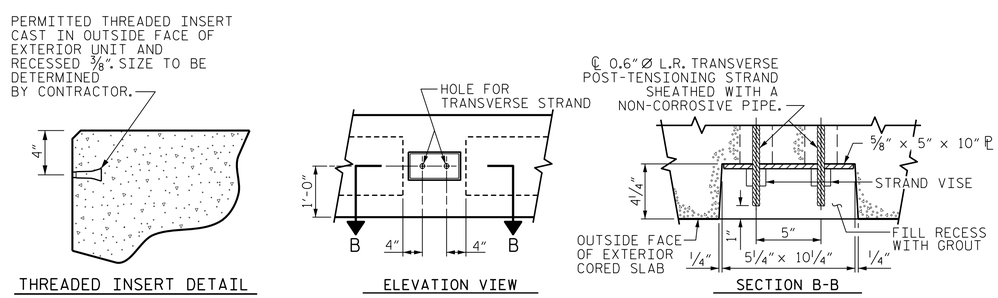

GROUTED RECESS AT END OF POST-TENSIONED STRAND • CORED SLABS

PROJECT NO. 44614
WASHINGTON COUNTY
STATION: 15+80.00 -L-

SHEET 1 OF 3

STATE OF NORTH CAROLINA
DEPARTMENT OF TRANSPORTATION
RALEIGH

STANDARD

3'-0'' X 2'-0'' PRESTRESSED CONCRETE CORED SLAB UNIT

NORTH CAROLINA PROFESSIONAL SEAL 24939 ENGINEER BYRON E. ATKINSON

12/19/2017

DOCUMENT NOT CONSIDERED FINAL UNLESS ALL SIGNATURES COMPLETED

MI ENGINEERING
1011 SCHAUB DRIVE, SUITE 100
RALEIGH, NC 27606
(919) 851-6606
FIRM PE NUMBER : P-0671

REVISIONS						
NO.	BY:	DATE:	NO.	BY:	DATE:	
1			3			
2			4			

SHEET NO. S-4
TOTAL SHEETS 13

ASSEMBLED BY:	B.E. LANNING	DATE:	01/17
CHECKED BY :	B.E. ATKINSON	DATE:	02/17
DESIGN ENGINEER OF RECORD:	B.E. ATKINSON	DATE:	06/17
DRAWN BY : MAA 6/10	REV. 8/14	MAA/TMG	
CHECKED BY : MKT 7/10			

STD. NO. 24PCS4_30_90S

12/19/2017
2:30:38 PM
User: blanning
Filename: P:\NC Bridges\MI6003_VHB_Div. 1 Br. Repl. (4 Bridges)\MI6003.01_Washington 26_SPN 44614\44614\Structures\401_007_44614_SMU_CSU1.dgn

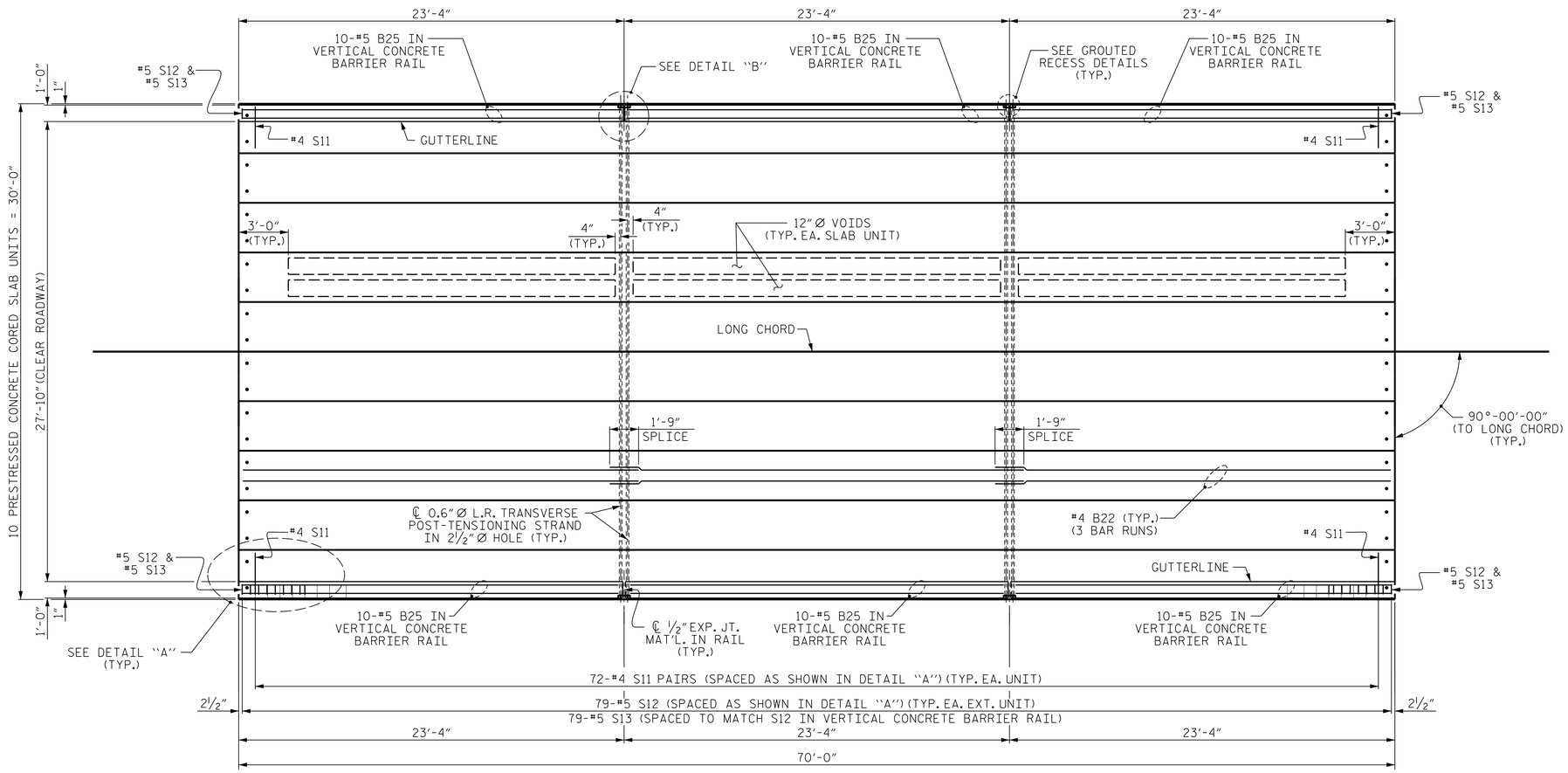

PLAN OF UNIT

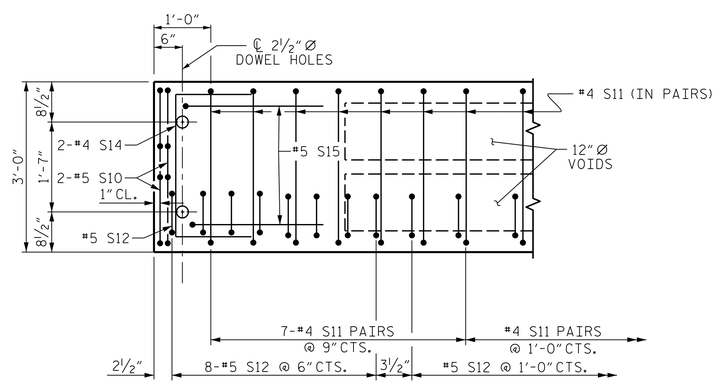

DETAIL "A"

(TYPICAL EACH END OF UNIT)
NOTE: EXTERIOR UNIT SHOWN - INTERIOR UNIT SIMILAR EXCEPT OMIT #5 S12 BARS.

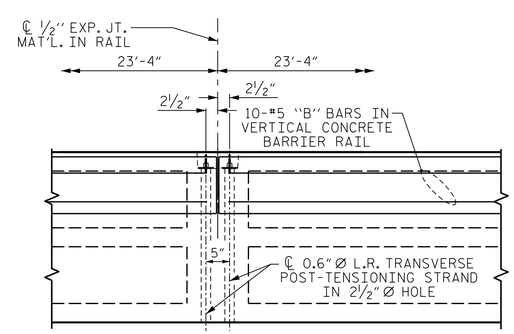

DETAIL "B"

#4 S11 BARS MAY BE SHIFTED AS NECESSARY TO MAINTAIN 1" CLEAR TO GROUTED RECESS AND 2½" Ø TRANSVERSE POST-TENSIONING STRAND HOLES

PROJECT NO. 44614
WASHINGTON COUNTY
STATION: 15+80.00 -L-

SHEET 2 OF 3

STATE OF NORTH CAROLINA
DEPARTMENT OF TRANSPORTATION
RALEIGH

PLAN OF 70' UNIT 27'-10" CLEAR ROADWAY 90° SKEW

NORTH CAROLINA PROFESSIONAL SEAL 24939 ENGINEER BYRON E. ATKINSON
12/19/2017

DOCUMENT NOT CONSIDERED FINAL UNLESS ALL SIGNATURES COMPLETED

MI ENGINEERING
1011 SCHAUB DRIVE, SUITE 100
RALEIGH, NC 27606
(919) 851-6606
FIRM PE NUMBER : P-0671

REVISIONS							SHEET NO.
NO.	BY:	DATE:	NO.	BY:	DATE:		S-5
1			3				TOTAL SHEETS
2			4				13

ASSEMBLED BY:	B.E. LANNING	DATE:	01/17
CHECKED BY :	B.E. ATKINSON	DATE:	02/17
DESIGN ENGINEER OF RECORD:	B.E. ATKINSON	DATE:	06/17
DRAWN BY : MAA 6/10	REV. 12/5/11	MAA/AAC	
CHECKED BY : MKT 7/10	REV. 8/14	MAA/TMC	

12/19/2017
2:30:40 PM
User: blanning
Filename: P:\NC Bridges\MI6003_VHB_Div. 1 Br. Repl. (4 Bridges)\MI6003.01_Washington 26_SPN 44614\44614\Structures\401_009_44614_SMU_CSU2.dgn

STD. NO. 24PCS_30_90S_70L

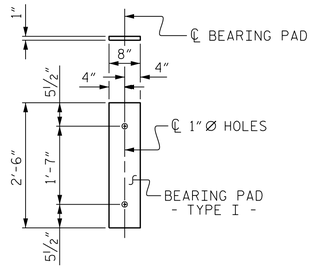

FIXED END
(TYPE I - 20 REQ'D.)

ELASTOMERIC BEARING DETAILS

ELASTOMER IN ALL BEARINGS SHALL BE 60 DUROMETER HARDNESS.

CORED SLABS REQUIRED

	NUMBER	LENGTH	TOTAL LENGTH
70' UNIT			
EXTERIOR C.S.	2	70'-0"	140'-0"
INTERIOR C.S.	8	70'-0"	560'-0"
TOTAL	10		700'-0"

DEAD LOAD DEFLECTION AND CAMBER

	3'-0" x 2'-0"
70' CORED SLAB UNIT	0.6" Ø L.R. STRAND
CAMBER (SLAB ALONE IN PLACE)	2¼" ↑
DEFLECTION DUE TO SUPERIMPOSED DEAD LOAD✱✱	¾" ↓
FINAL CAMBER	1½" ↑

✱✱ INCLUDES FUTURE WEARING SURFACE

BAR TYPES

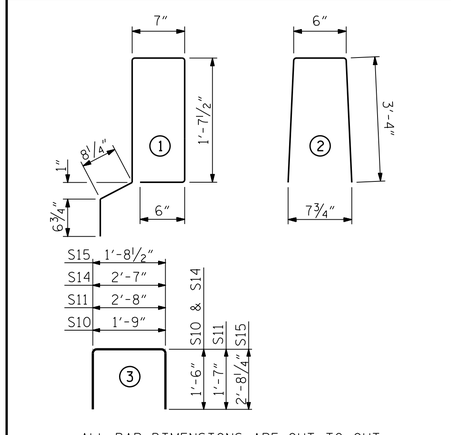

ALL BAR DIMENSIONS ARE OUT TO OUT.

CONCRETE RELEASE STRENGTH

UNIT	PSI
70' UNITS	5500

GRADE 270 STRANDS

	0.6" Ø L.R.
AREA (SQUARE INCHES)	0.217
ULTIMATE STRENGTH (LBS. PER STRAND)	58,600
APPLIED PRESTRESS (LBS. PER STRAND)	43,950

GUTTERLINE ASPHALT THICKNESS & RAIL HEIGHT

	ASPHALT OVERLAY THICKNESS @ MID-SPAN	RAIL HEIGHT @ MID-SPAN
70' UNITS	2"	3'-8"

BILL OF MATERIAL FOR VERTICAL CONCRETE BARRIER RAIL

BAR	BARS PER PAIR OF EXTERIOR UNITS	TOTAL NO.	SIZE	TYPE	LENGTH	WEIGHT
	70' UNIT					
✱B25	60	60	#5	STR	22'-11"	1434
✱S13	158	158	#5	2	7'-2"	1181
✱ EPOXY COATED REINFORCING STEEL				LBS.		2615
CLASS AA CONCRETE				CU.YDS.		18.1
TOTAL VERTICAL CONCRETE BARRIER RAIL				LN. FT.		140.25

BILL OF MATERIAL FOR ONE 70' CORED SLAB UNIT

				EXTERIOR UNIT		INTERIOR UNIT	
BAR	NUMBER	SIZE	TYPE	LENGTH	WEIGHT	LENGTH	WEIGHT
B22	6	#4	STR	24'-6"	98	24'-6"	98
S10	8	#5	3	4'-9"	40	4'-9"	40
S11	144	#4	3	5'-10"	561	5'-10"	561
✱S12	79	#5	1	5'-7"	460		
S14	4	#4	3	5'-7"	15	5'-7"	15
S15	4	#5	3	7'-1"	30	7'-1"	30
REINFORCING STEEL			LBS.		744		744
✱ EPOXY COATED REINFORCING STEEL			LBS.		460		
7000 P.S.I. CONCRETE			CU. YDS.		11.8		11.8
0.6" Ø L.R. STRANDS			No.		28		28

NOTES

ALL PRESTRESSING STRANDS SHALL BE 7-WIRE LOW RELAXATION GRADE 270 STRANDS AND SHALL CONFORM TO AASHTO M203 EXCEPT FOR SAMPLING REQUIREMENTS WHICH SHALL BE IN ACCORDANCE WITH THE STANDARD SPECIFICATIONS.

ALL REINFORCING STEEL CAST WITH THE CORED SLAB SECTIONS SHALL BE GRADE 60 AND SHALL BE INCLUDED IN THE UNIT PRICE BID FOR PRESTRESSED CONCRETE CORED SLABS.

RECESSES FOR TRANSVERSE STRANDS SHALL BE GROUTED AFTER THE TENSIONING OF THE STRANDS.

THE 2½"Ø DOWEL HOLES AT FIXED ENDS OF SLAB SECTIONS SHALL BE FILLED WITH NON-SHRINK GROUT.

THE BACKER RODS SHALL CONFORM TO THE REQUIREMENTS OF TYPE M BOND BREAKER. SEE SECTION 1028 OF THE STANDARD SPECIFICATIONS.

WHEN CORED SLABS ARE CAST, AN INTERNAL HOLD-DOWN SYSTEM SHALL BE EMPLOYED TO PREVENT VOIDS FROM RISING OR MOVING SIDEWAYS. AT LEAST SIX WEEKS PRIOR TO CASTING CORED SLABS, THE CONTRACTOR SHALL SUBMIT TO THE ENGINEER FOR REVIEW AND COMMENT, DETAILED DRAWINGS OF THE PROPOSED HOLD-DOWN SYSTEM. IN ADDITION TO STRUCTURAL DETAILS, LOCATION AND SPACING OF THE HOLD-DOWNS SHALL BE INDICATED.

THE TRANSFER OF LOAD FROM THE ANCHORAGES TO THE CORED SLAB UNIT SHALL BE DONE WHEN THE CONCRETE HAS REACHED A COMPRESSIVE STRENGTH OF NOT LESS THAN THE REQUIRED STRENGTH SHOWN IN THE "CONCRETE RELEASE STRENGTH" TABLE.

ALL REINFORCING STEEL IN VERTICAL CONCRETE BARRIER RAILS SHALL BE EPOXY COATED.

PRESTRESSING STRANDS SHALL BE CUT FLUSH WITH THE CORED SLAB UNIT ENDS.

APPLY EPOXY PROTECTIVE COATING TO CORED SLAB UNIT ENDS.

GROOVED CONTRACTION JOINTS, ½" IN DEPTH, SHALL BE TOOLED IN ALL EXPOSED FACES OF THE BARRIER RAIL AND IN ACCORDANCE WITH ARTICLE 825-10(B) OF THE STANDARD SPECIFICATIONS. A CONTRACTION JOINT SHALL BE LOCATED AT EACH THIRD POINT BETWEEN BARRIER RAIL EXPANSION JOINTS. ONLY ONE CONTRACTION JOINT IS REQUIRED AT MIDPOINT OF BARRIER RAIL SEGMENTS LESS THAN 20 FEET IN LENGTH AND NO CONTRACTION JOINTS ARE REQUIRED FOR THOSE SEGMENTS LESS THAN 10 FEET IN LENGTH.

FLAME CUTTING OF THE TRANSVERSE POST-TENSIONING STRAND IS NOT ALLOWED.

MAINTAIN A SYMMETRIC TENSION FORCE BETWEEN EACH PAIR OF TRANSVERSE POST TENSIONING STRANDS IN THE DIAPHRAGM.

THE #4 S11 STIRRUPS MAY BE SHIFTED AS NECESSARY TO MAINTAIN 1" CLEAR TO THE GROUTED RECESS.

FOR GROUT FOR STRUCTURES, SEE SPECIAL PROVISIONS.

THE PERMITTED THREADED INSERTS ARE DETAILED AS AN OPTION FOR THE CONTRACTOR TO ATTACH FALSEWORK AND FORMWORK DURING CONSTRUCTION.

THE PERMITTED THREADED INSERTS IN THE EXTERIOR UNITS SHALL BE SIZED BY THE CONTRACTOR, SPACED AT 4'-0" CENTERS AND GALVANIZED IN ACCORDANCE WITH SECTION 1076 OF THE STANDARD SPECIFICATIONS. STAINLESS STEEL THREADED INSERTS MAY BE USED AS AN ALTERNATE.

THE PERMITTED THREADED INSERTS SHALL BE GROUTED BY THE CONTRACTOR IMMEDIATELY FOLLOWING REMOVAL OF THE FALSEWORK.

THE COST OF THE PERMITTED THREADED INSERTS SHALL BE INCLUDED IN THE PRICE BID FOR THE PRECAST UNITS.

POST-TENSIONING SHALL BE DONE IN ACCORDANCE WITH THE STANDARD SPECIFICATIONS.

PRESTRESSED CONCRETE CORED SLAB UNITS ARE DESIGNED FOR 0 PSI TENSION IN THE PRECOMPRESSED TENSILE ZONE UNDER ALL LOADING CONDITIONS.

PRESTRESSED CONCRETE CORED SLAB UNITS SHALL CONTAIN CALCIUM NITRATE CORROSION INHIBITOR IN ACCORDANCE WITH THE STANDARD SPECIFICATIONS.

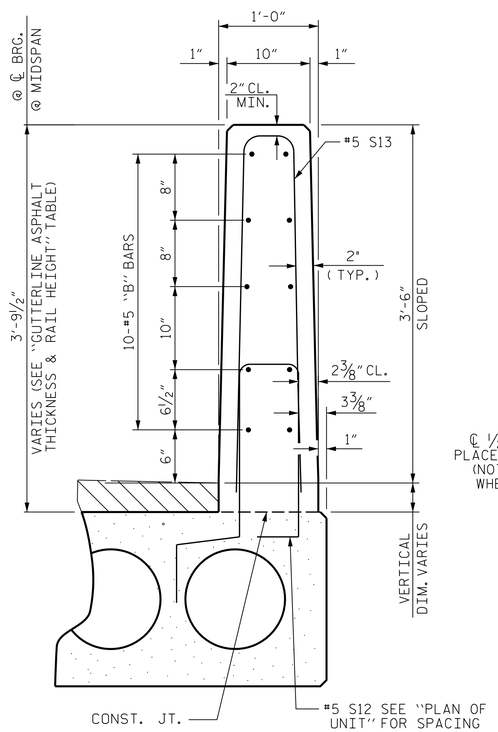

SECTION THRU RAIL

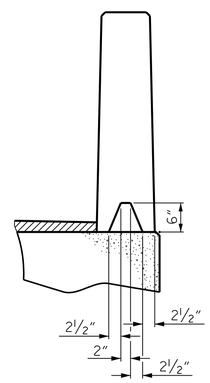

SECTION S-S
AT DAM IN OPEN JOINT
(THIS IS TO BE USED ONLY WHEN SLIP FORM IS USED)

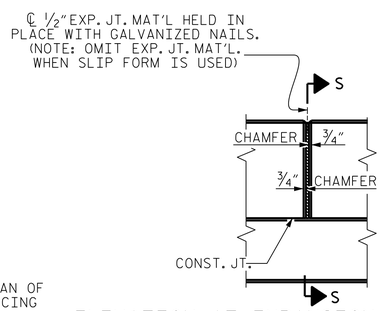

ELEVATION AT EXPANSION JOINTS

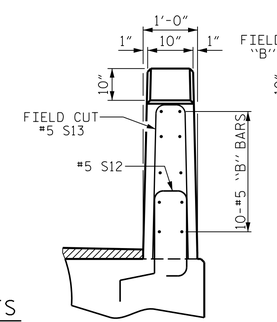

END VIEW

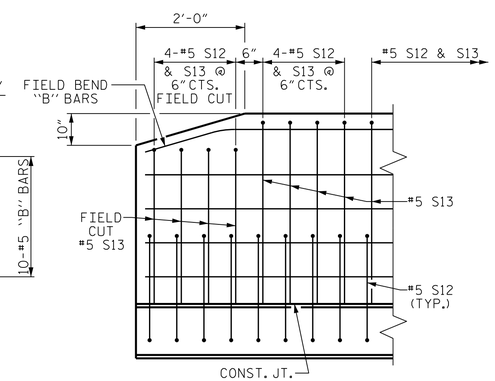

SIDE VIEW

VERTICAL CONCRETE BARRIER RAIL DETAILS

END OF RAIL DETAILS

PROJECT NO. 44614
WASHINGTON COUNTY
STATION: 15+80.00 -L-

SHEET 3 OF 3

STATE OF NORTH CAROLINA
DEPARTMENT OF TRANSPORTATION
RALEIGH

STANDARD
3'-0" X 2'-0"
PRESTRESSED CONCRETE CORED SLAB UNIT

NORTH CAROLINA PROFESSIONAL SEAL 24939 ENGINEER BYRON E. ATKINSON
2/21/2018

DOCUMENT NOT CONSIDERED FINAL UNLESS ALL SIGNATURES COMPLETED

MI ENGINEERING
1011 SCHAUB DRIVE, SUITE 100
RALEIGH, NC 27606
(919) 851-6606
FIRM PE NUMBER : P-0671

ASSEMBLED BY:	B.E. LANNING	DATE: 01/17
CHECKED BY :	B.E. ATKINSON	DATE: 02/17
DESIGN ENGINEER OF RECORD:	B.E. ATKINSON	DATE: 06/17
DRAWN BY : MAA 6/10	REV. 11/14	MAA/TMG
CHECKED BY : MKT 7/10		

REVISIONS						SHEET NO.
NO.	BY:	DATE:	NO.	BY:	DATE:	S-6
1			3			TOTAL SHEETS
2			4			13

STD. NO. 24PCS3_30_90S

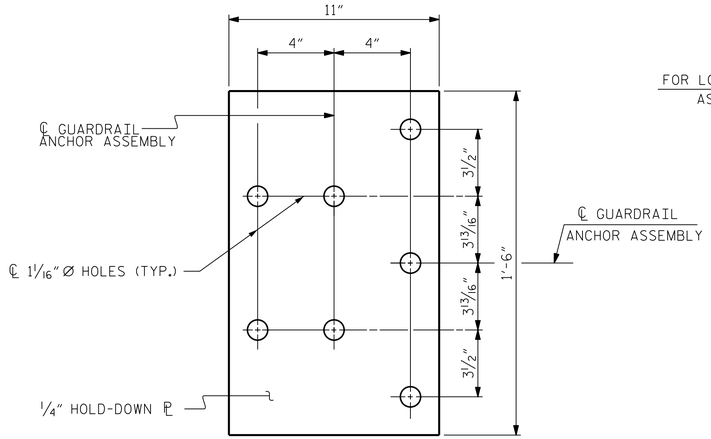

PLAN

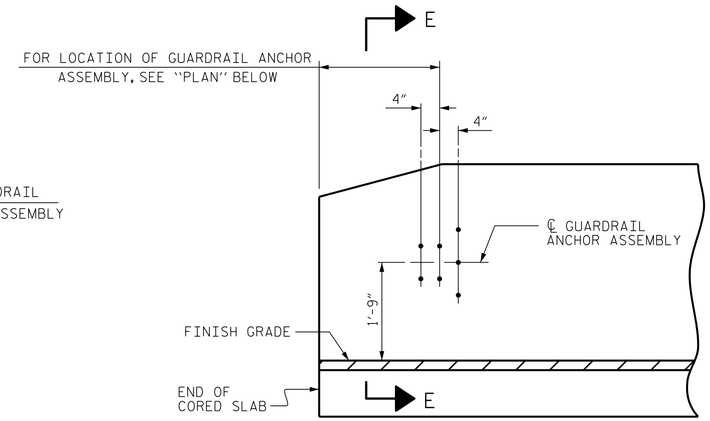

ELEVATION

NOTES

THE GUARDRAIL ANCHOR ASSEMBLY SHALL CONSIST OF A 1/4" HOLD DOWN PLATE AND 7 - 7/8" Ø BOLTS WITH NUTS AND WASHERS.

THE HOLD-DOWN PLATE SHALL CONFORM TO AASHTO M270 GRADE 36. AFTER FABRICATION, THE HOLD-DOWN PLATE SHALL BE HOT-DIP GALVANIZED IN ACCORDANCE WITH AASHTO M111.

BOLTS SHALL CONFORM TO THE REQUIREMENTS OF ASTM A307 AND NUTS SHALL CONFORM TO THE REQUIREMENTS OF AASHTO M291. BOLTS, NUTS AND WASHERS SHALL BE GALVANIZED. (AT THE CONTRACTOR'S OPTION, STAINLESS STEEL BOLTS, NUTS AND WASHERS MAY BE USED AS AN ALTERNATE FOR THE 7/8" Ø GALVANIZED BOLTS, NUTS AND WASHERS. THEY SHALL CONFORM TO OR EXCEED THE MECHANICAL REQUIREMENTS OF ASTM A307. THE USE OF THIS ALTERNATE SHALL BE APPROVED BY THE ENGINEER.)

THE GUARDRAIL ANCHOR ASSEMBLY IS REQUIRED AT ALL POINTS WHERE APPROACH GUARDRAIL IS TO BE ATTACHED TO THE END OF BARRIER RAIL. FOR POINTS OF ATTACHMENT, SEE SKETCH.

AFTER INSTALLATION, THE EXPOSED THREAD OF THE BOLT SHALL BE BURRED WITH A SHARP POINTED TOOL.

THE COST OF THE GUARDRAIL ANCHOR ASSEMBLY SHALL BE INCLUDED IN THE UNIT CONTRACT PRICE BID FOR VERTICAL CONCRETE BARRIER RAIL.

THE VERTICAL REINFORCING BARS MAY BE SHIFTED SLIGHTLY IN THE VERTICAL CONCRETE BARRIER RAIL TO CLEAR ASSEMBLY BOLTS.

THE 1 1/4" Ø HOLES SHALL BE FORMED OR DRILLED WITH A CORE BIT. IMPACT TOOLS WILL NOT BE PERMITTED. ANY CONCRETE DAMAGED BY THIS WORK SHALL BE REPAIRED TO THE SATISFACTION OF THE ENGINEER.

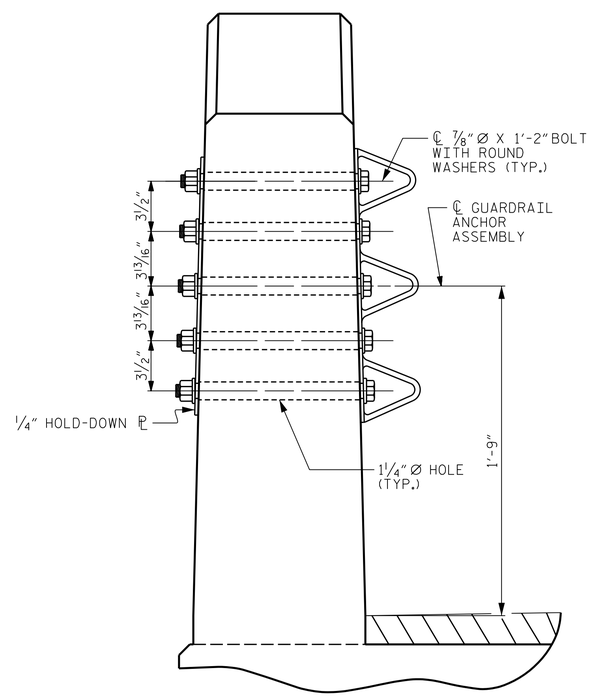

SECTION E-E

GUARDRAIL ANCHOR ASSEMBLY DETAILS

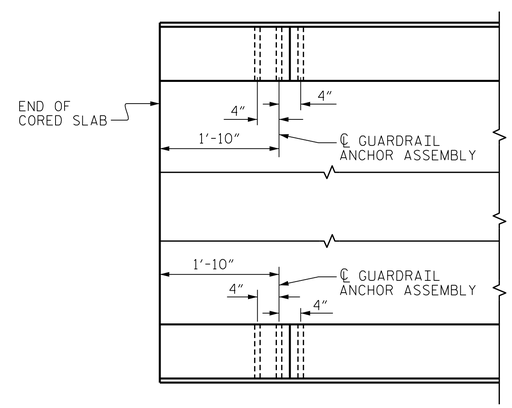

PLAN

LOCATION OF ANCHORS FOR GUARDRAIL

END BENT 1 SHOWN, END BENT 2 SIMILAR.

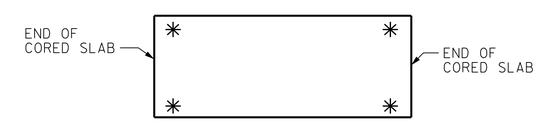

SKETCH SHOWING POINTS OF ATTACHMENT

✳ DENOTES GUARDRAIL ANCHOR ASSEMBLY

PROJECT NO. 44614

WASHINGTON COUNTY

STATION: 15+80.00 -L-

STATE OF NORTH CAROLINA
DEPARTMENT OF TRANSPORTATION
RALEIGH

STANDARD
GUARDRAIL ANCHORAGE DETAILS
FOR VERTICAL CONCRETE BARRIER RAIL

NORTH CAROLINA PROFESSIONAL SEAL 24939 ENGINEER BYRON E. ATKINSON
2/21/2018

DOCUMENT NOT CONSIDERED FINAL UNLESS ALL SIGNATURES COMPLETED

MI ENGINEERING
1011 SCHAUB DRIVE, SUITE 100
RALEIGH, NC 27606
(919) 851-6606
FIRM PE NUMBER : P-0671

REVISIONS						SHEET NO.
NO.	BY:	DATE:	NO.	BY:	DATE:	S-7
1			3			TOTAL SHEETS
2			4			13

ASSEMBLED BY:	B.E. LANNING	DATE:	12/17
CHECKED BY :	B.E. ATKINSON	DATE:	12/17
DESIGN ENGINEER OF RECORD:	B.E. ATKINSON	DATE:	12/17

DRAWN BY : MAA	5/10	REV. 6/13	MAA/GM
CHECKED BY : GM	5/10	REV. 1/15	MAA/TMG
		REV. 12/17	MAA/THC

2/21/2018
10:55:42 AM
User:blanning
Filename: P:\NC Bridges\MI6003_VHB_Div.1 Br. Repl. 14 Bridges\MI6003.01_Washington 26_SPN 44614\44614\Structures\401_013_44614_SMU_GRA1.dgn

(SHT 1) STD. NO. GRA3

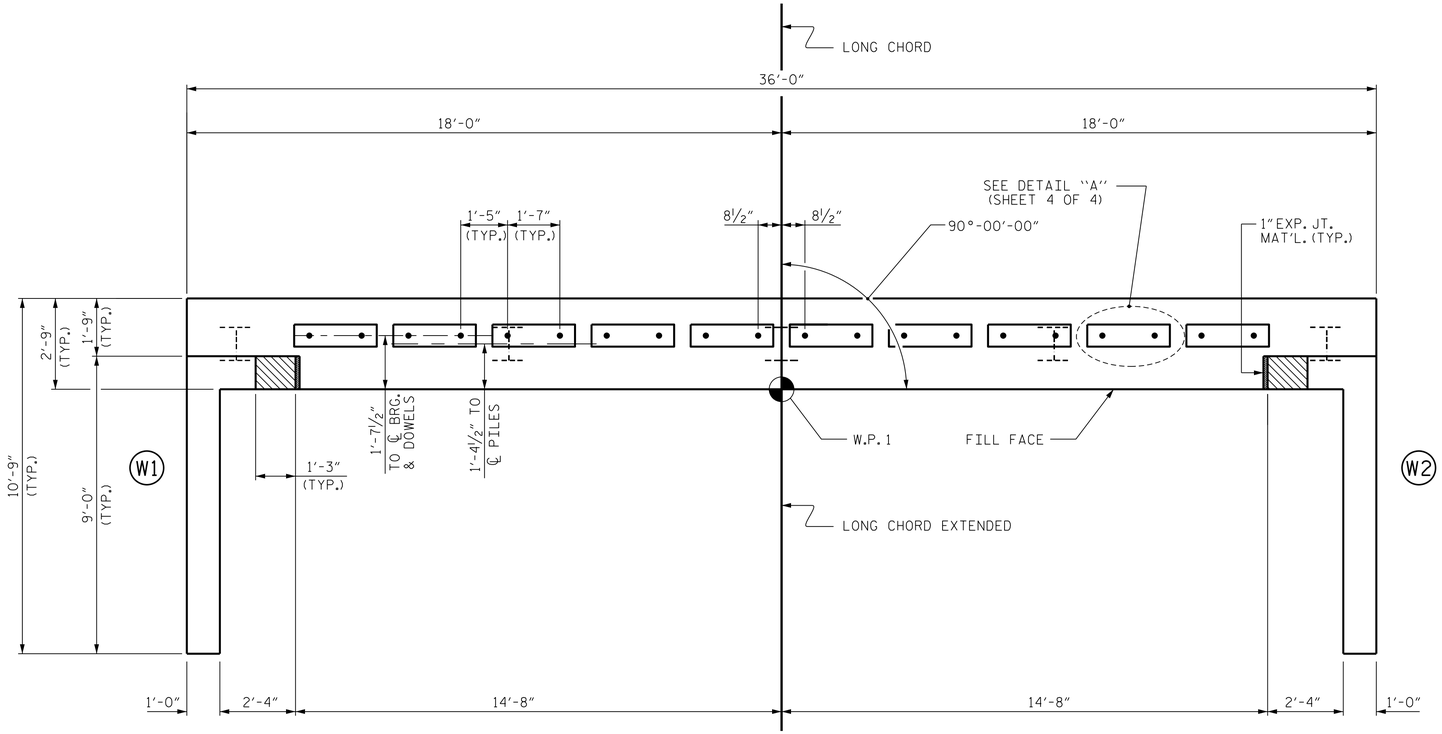

PLAN

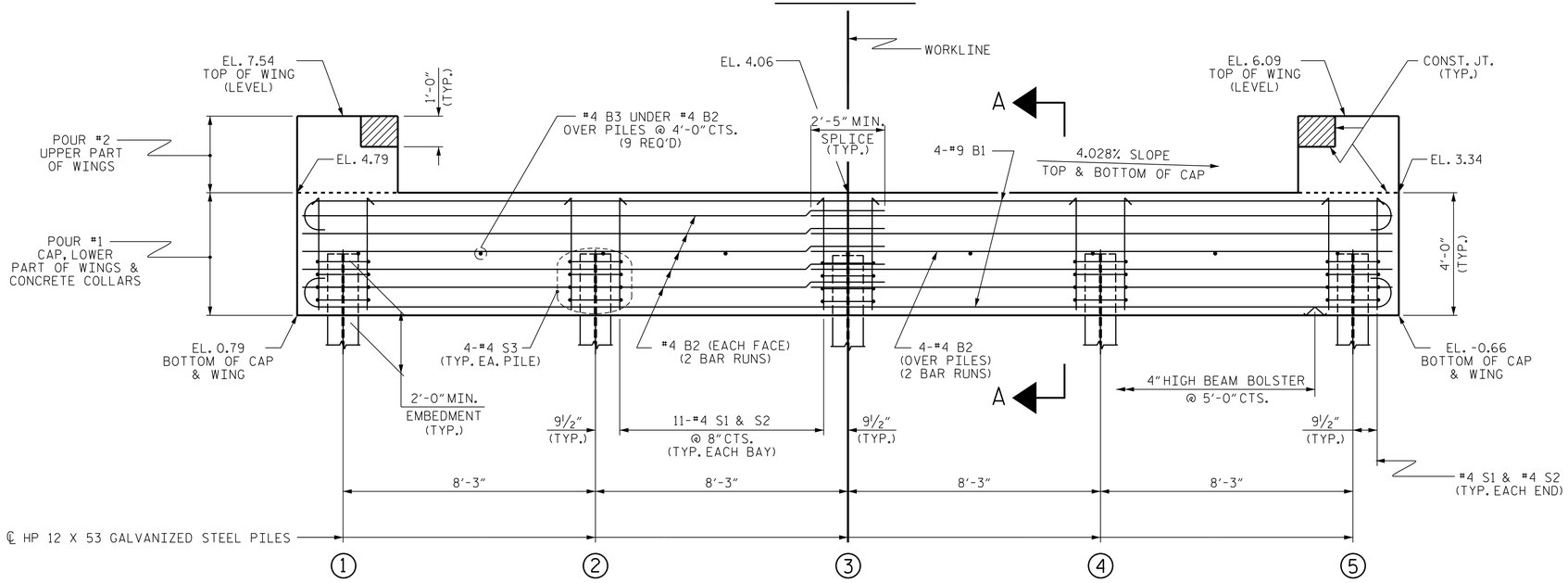

ELEVATION

WINGS NOT SHOWN FOR CLARITY.
FOR SECTION A-A, SEE SHEET 4 OF 4.
CONCRETE COLLARS FOR STEEL PILES NOT SHOWN IN PLAN AND ELEVATION VIEWS FOR CLARITY.
SEE "CORROSION PROTECTION FOR STEEL PILES DETAIL", SHEET 4 OF 4.

NOTES

STIRRUPS IN CAP MAY BE SHIFTED AS NECESSARY TO CLEAR DOWELS.

THE CONCRETE IN THE SHADED AREA OF THE WING SHALL BE POURED AFTER THE VERTICAL CONCRETE BARRIER RAIL IS CAST IF SLIP FORMING IS USED.

FOR PILE SPLICE DETAILS, SEE SHEET 4 OF 4.

FOR WING DETAILS, SEE SHEET 3 OF 4.

GALVANIZE THE FULL LENGTH OF EACH END BENT PILE IN ACCORDANCE WITH SECTION 1076 OF THE STANDARD SPECIFICATIONS.

TOP OF PILE ELEVATIONS	
1	2.75
2	2.42
3	2.09
4	1.75
5	1.42

PROJECT NO. 44614
WASHINGTON COUNTY
STATION: 15+80.00 -L-

SHEET 1 OF 4

STATE OF NORTH CAROLINA
DEPARTMENT OF TRANSPORTATION
RALEIGH

SUBSTRUCTURE

END BENT No. 1

NORTH CAROLINA PROFESSIONAL SEAL 24939 ENGINEER BYRON E. ATKINSON

12/19/2017

DOCUMENT NOT CONSIDERED FINAL UNLESS ALL SIGNATURES COMPLETED

MI ENGINEERING
1011 SCHAUB DRIVE, SUITE 100
RALEIGH, NC 27606
(919) 851-6606
FIRM PE NUMBER : P-0671

ASSEMBLED BY:	B.E. LANNING	DATE:	06/17
CHECKED BY :	B.E. ATKINSON	DATE:	06/17
DESIGN ENGINEER OF RECORD:	B.E. ATKINSON	DATE:	06/17
DRAWN BY : WJH 12/11	REV. 4/15	MAA/TMG	
CHECKED BY : AAC 12/11			

REVISIONS								SHEET NO.
NO.	BY:	DATE:	NO.	BY:	DATE:			S-8
1			3					TOTAL SHEETS
2			4					13

STD. NO. EB_30_90S4

12/19/2017
2:30:46 PM
User: blanning
Filename: P:\NC Bridges\MI6003_VHB_Div.1 Br. Repl.(4 Bridges)\MI6003.01_Washington 26_SPN 44614\44614\Structures\401_015_44614_SMU_EB1.dgn

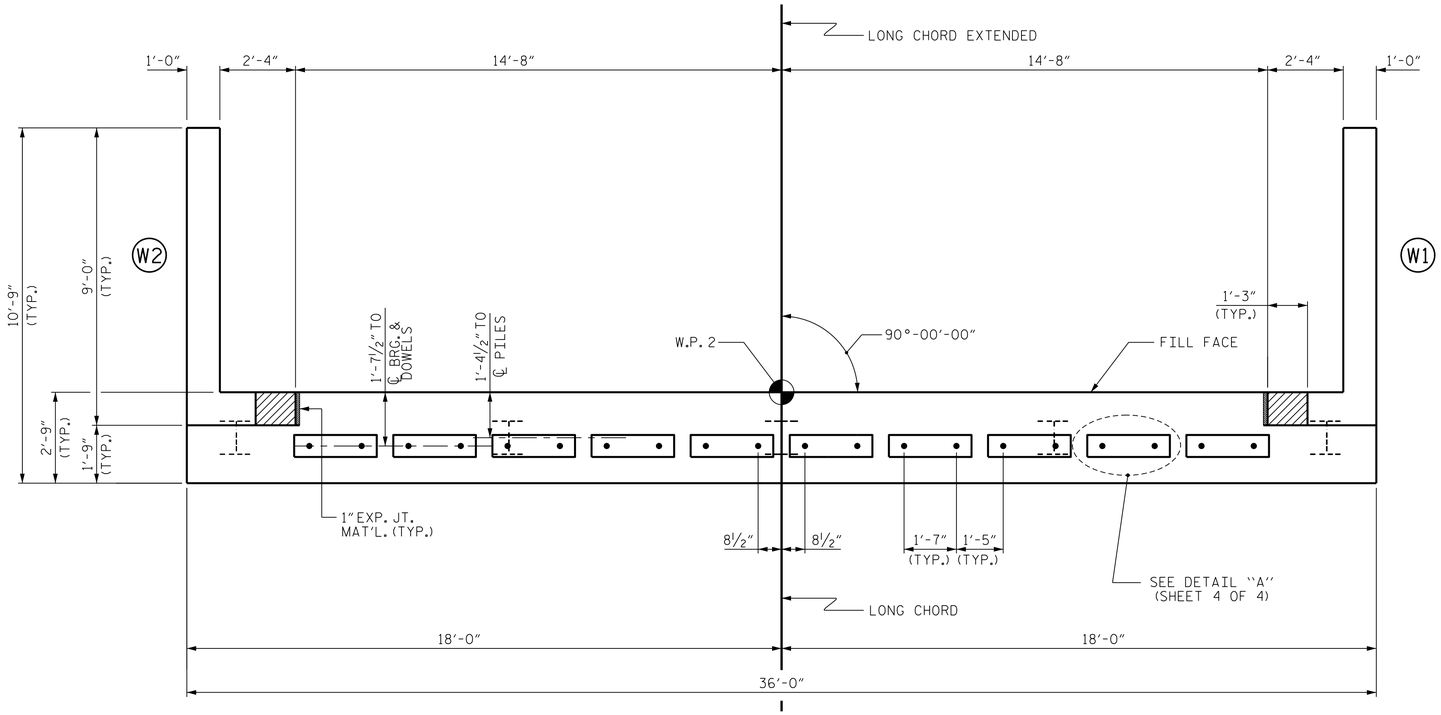

PLAN

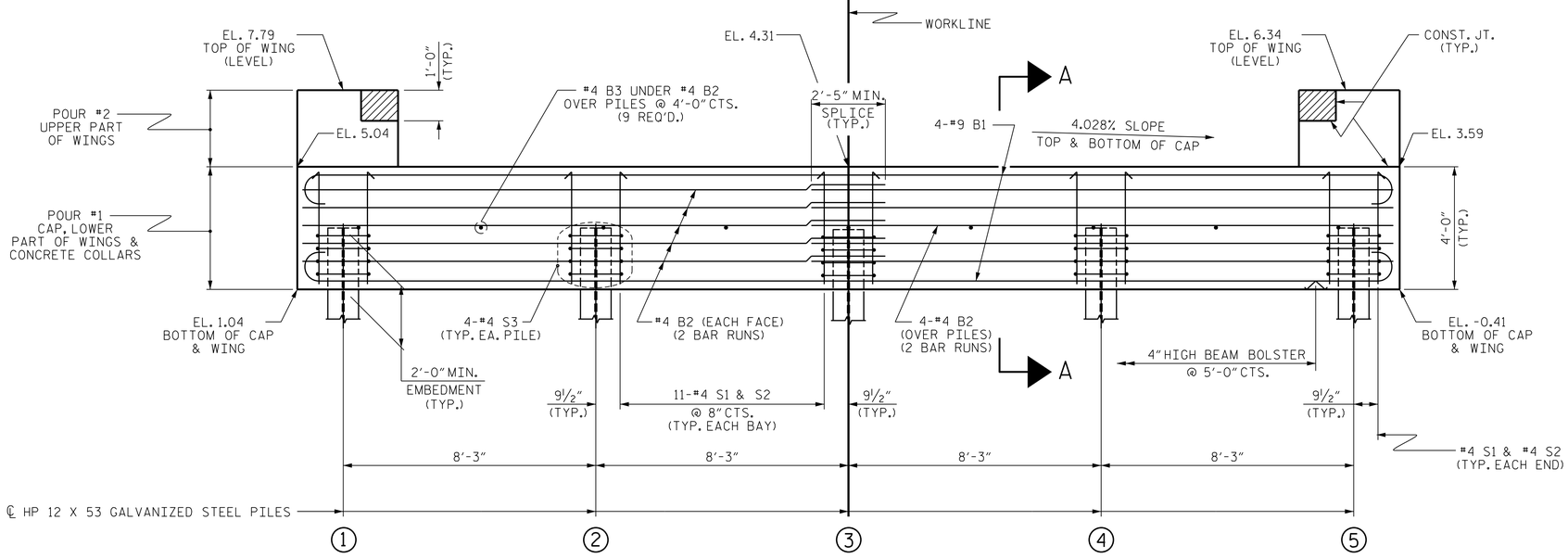

ELEVATION

WINGS NOT SHOWN FOR CLARITY.
FOR SECTION A-A, SEE SHEET 4 OF 4.
CONCRETE COLLARS FOR STEEL PILES NOT SHOWN IN PLAN AND ELEVATION VIEWS FOR CLARITY.
SEE "CORROSION PROTECTION FOR STEEL PILES DETAIL", SHEET 4 OF 4.

NOTES

STIRRUPS IN CAP MAY BE SHIFTED AS NECESSARY TO CLEAR DOWELS.

THE CONCRETE IN THE SHADED AREA OF THE WING SHALL BE POURED AFTER THE VERTICAL CONCRETE BARRIER RAIL IS CAST IF SLIP FORMING IS USED.

FOR PILE SPLICE DETAILS, SEE SHEET 4 OF 4.

FOR WING DETAILS, SEE SHEET 3 OF 4.

GALVANIZE THE FULL LENGTH OF EACH END BENT PILE IN ACCORDANCE WITH SECTION 1076 OF THE STANDARD SPECIFICATIONS.

TOP OF PILE ELEVATIONS	
1	3.00
2	2.67
3	2.33
4	2.00
5	1.67

PROJECT NO. 44614
WASHINGTON COUNTY
STATION: 15+80.00 -L-

SHEET 2 OF 4

STATE OF NORTH CAROLINA
DEPARTMENT OF TRANSPORTATION
RALEIGH

SUBSTRUCTURE

END BENT No. 2

NORTH CAROLINA PROFESSIONAL SEAL 24939 ENGINEER BYRON E. ATKINSON
Docu Sign Envelope ID: 2418B0C8-B9C6-4427-A7C1-A0A0A0A0A0A0
12/19/2017

DOCUMENT NOT CONSIDERED FINAL UNLESS ALL SIGNATURES COMPLETED

MI ENGINEERING
1011 SCHAUB DRIVE, SUITE 100
RALEIGH, NC 27606
(919) 851-6606
FIRM PE NUMBER : P-0671

REVISIONS						
NO.	BY:	DATE:	NO.	BY:	DATE:	
1			3			
2			4			

SHEET NO. S-9
TOTAL SHEETS 13

ASSEMBLED BY:	B.E. LANNING	DATE:	06/17
CHECKED BY :	B.E. ATKINSON	DATE:	06/17
DESIGN ENGINEER OF RECORD:	B.E. ATKINSON	DATE:	06/17
DRAWN BY : WJH 12/11	REV. 4/15	MAA/TMG	
CHECKED BY : AAC 12/11			

STD. NO. EB_30_90S4

12/19/2017
2:30:48 PM
User: blanning
Filename: P:\NC Bridges\MI6003_VHB_Div.1 Br. Repl.(4 Bridges)\MI6003.01_Washington 26_SPN 44614\44614\Structures\401.017.44614.SMU.EB2.dgn

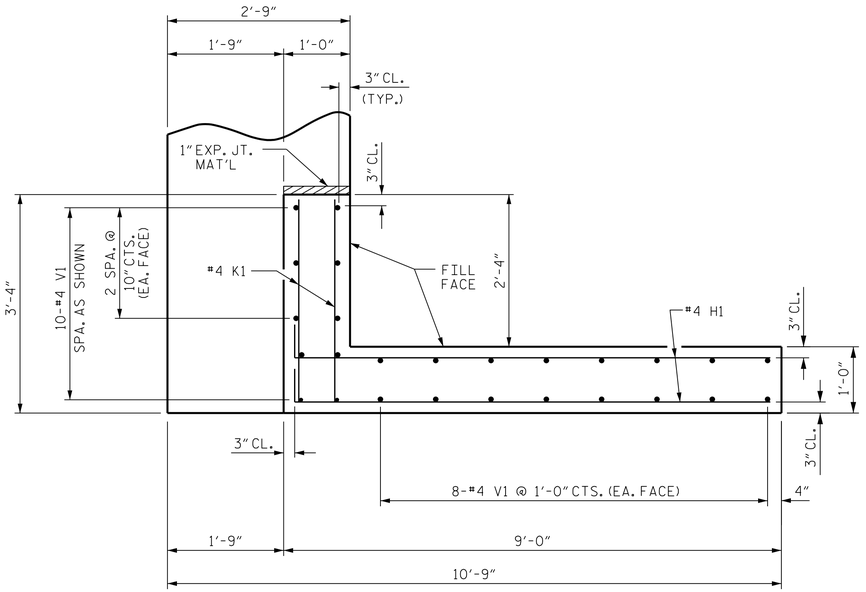

PLAN OF WING (W1)

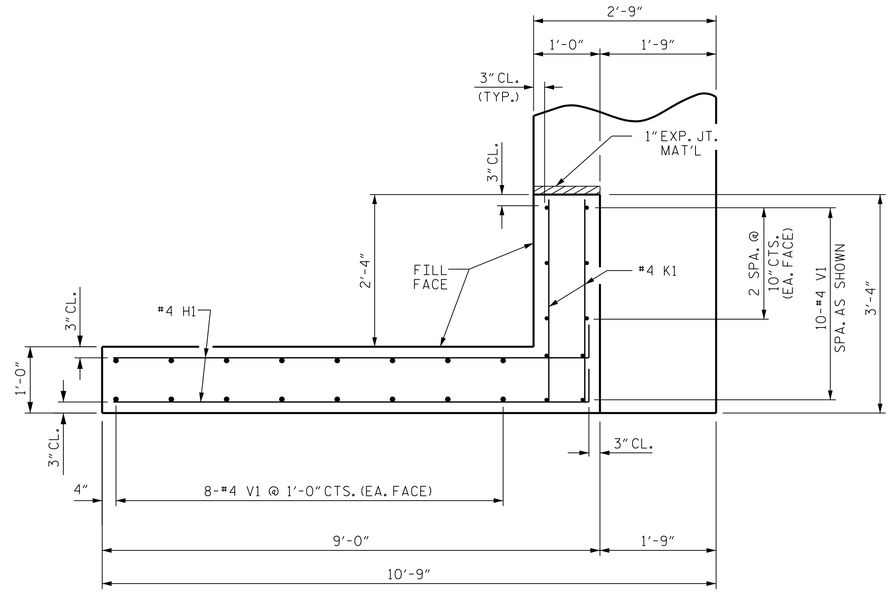

PLAN OF WING (W2)

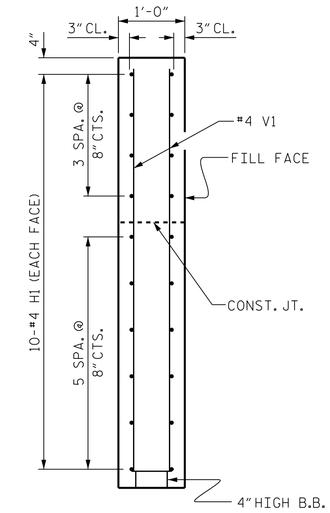

SECTION X-X

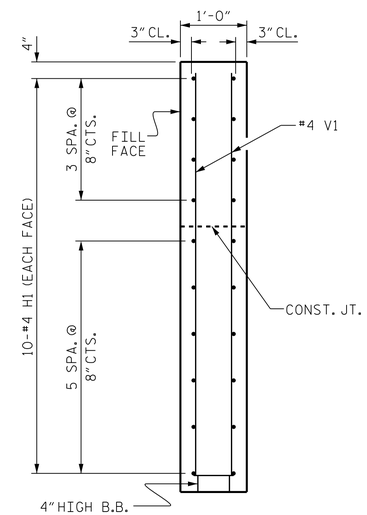

SECTION Y-Y

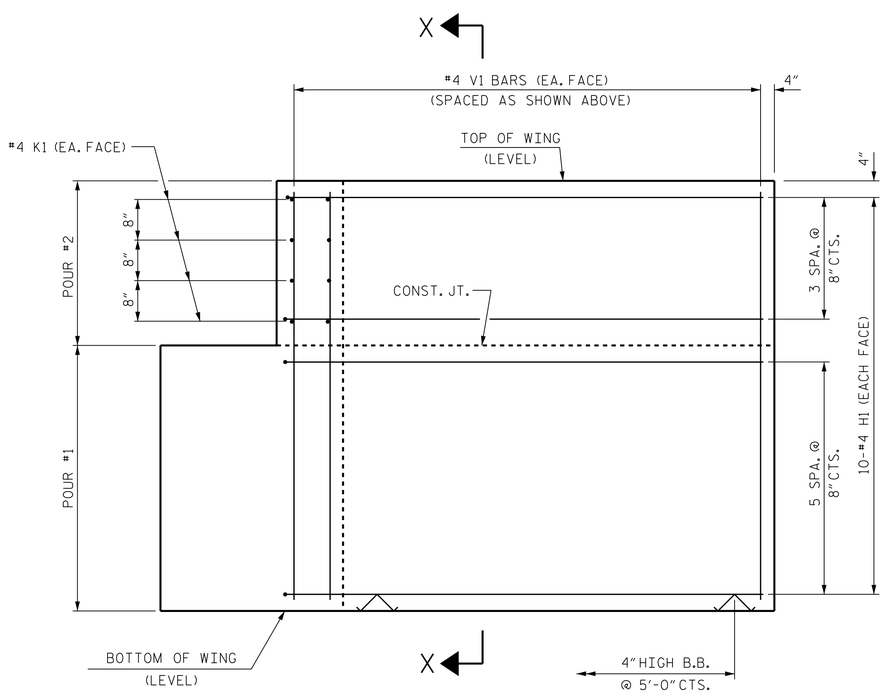

ELEVATION OF WING (W1)

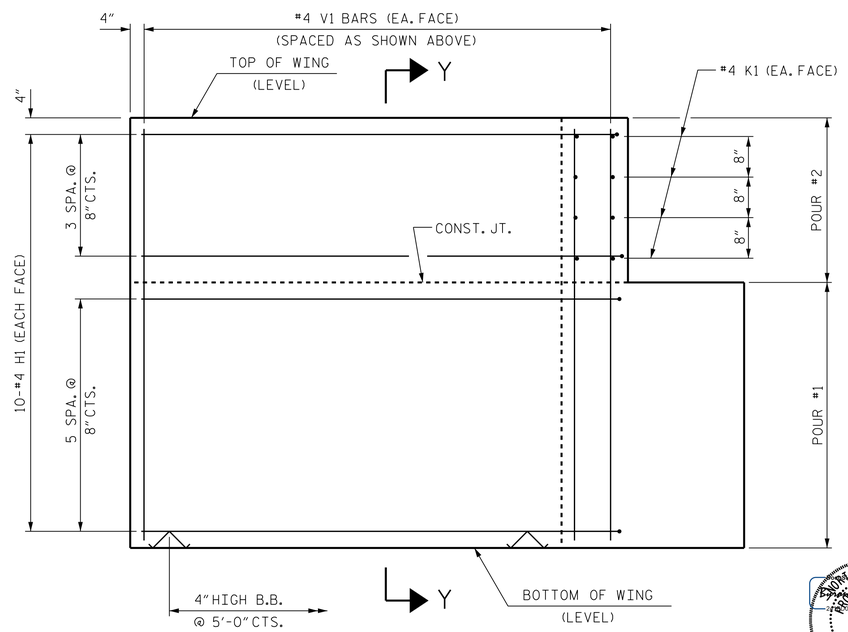

ELEVATION OF WING (W2)

WING DETAILS

PROJECT NO. 44614

WASHINGTON COUNTY

STATION: 15+80.00 -L-

SHEET 3 OF 4

NORTH CAROLINA PROFESSIONAL ENGINEER SEAL 24939 BYRON E. ATKINSON

12/19/2017

STATE OF NORTH CAROLINA
DEPARTMENT OF TRANSPORTATION
RALEIGH

SUBSTRUCTURE

END BENT
WING DETAILS

DOCUMENT NOT CONSIDERED FINAL UNLESS ALL SIGNATURES COMPLETED

MI ENGINEERING
1011 SCHAUB DRIVE, SUITE 100
RALEIGH, NC 27606
(919) 851-6606
FIRM PE NUMBER : P-0671

REVISIONS						
NO.	BY:	DATE:	NO.	BY:	DATE:	
1			3			
2			4			

SHEET NO. S-10

TOTAL SHEETS 13

ASSEMBLED BY:	B.E. LANNING	DATE: 06/17
CHECKED BY :	B.E. ATKINSON	DATE: 06/17
DESIGN ENGINEER OF RECORD:	B.E. ATKINSON	DATE: 06/17
DRAWN BY : WJH 12/11	REV. 4/15	MAA/TMG
CHECKED BY : AAC 12/11		

STD. NO. EB_30_90S4

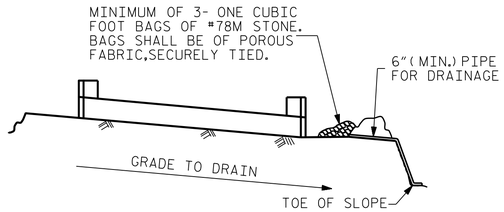

BAGGED STONE AND PIPE SHALL BE PLACED IMMEDIATELY AFTER COMPLETION OF END BENT EXCAVATION. PIPE MAY BE EITHER CONCRETE, CORRUGATED STEEL, CORRUGATED ALUMINUM ALLOY, OR CORRUGATED PLASTIC. PERFORATED PIPE WILL NOT BE ALLOWED.

BAGGED STONE SHALL REMAIN IN PLACE UNTIL THE ENGINEER DIRECTS THAT IT BE REMOVED. THE CONTRACTOR SHALL REMOVE AND DISPOSE OF SILT ACCUMULATIONS AT BAGGED STONE WHEN SO DIRECTED BY THE ENGINEER. BAGS SHALL BE REMOVED AND REPLACED WHENEVER THE ENGINEER DETERMINES THAT THEY HAVE DETERIORATED AND LOST THEIR EFFECTIVENESS.

NO SEPARATE PAYMENT WILL BE MADE FOR THIS WORK AND THE ENTIRE COST OF THIS WORK SHALL BE INCLUDED IN THE UNIT CONTRACT PRICE BID FOR THE SEVERAL PAY ITEMS.

TEMPORARY DRAINAGE AT END BENT

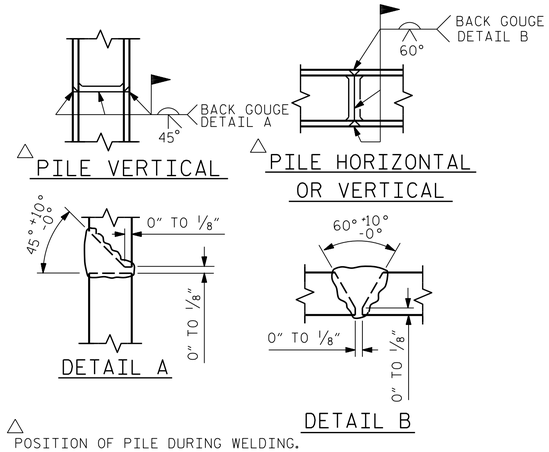

△ POSITION OF PILE DURING WELDING.

PILE SPLICE DETAILS

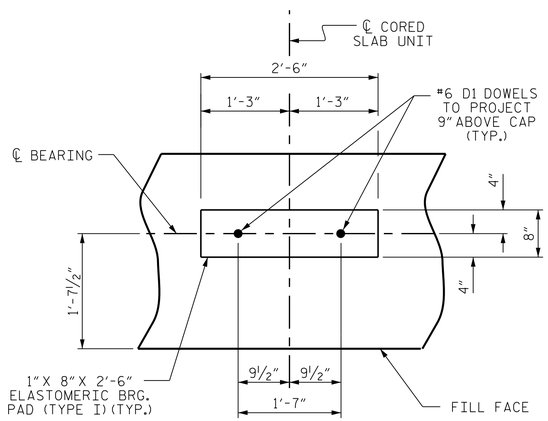

DETAIL "A"

(END BENT No. 1 SHOWN, END BENT No. 2 SIMILAR BY ROTATION)

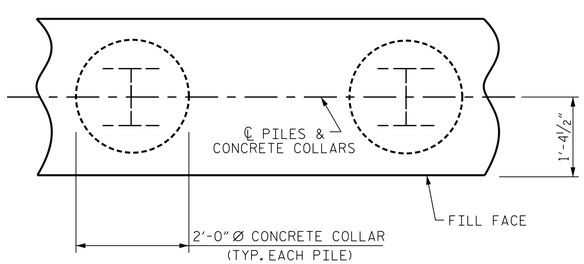

PLAN

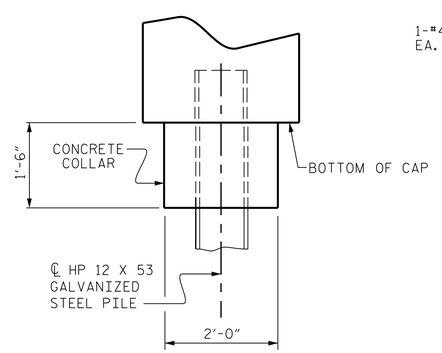

ELEVATION

CORROSION PROTECTION FOR STEEL PILES DETAIL

(END BENT No. 1 SHOWN, END BENT No. 2 SIMILAR BY ROTATION)

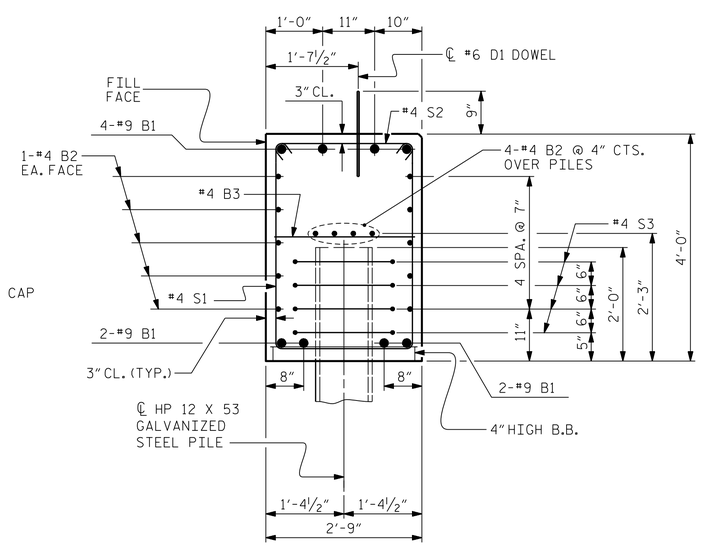

SECTION A-A

(CONCRETE COLLAR NOT SHOWN FOR CLARITY. SEE "CORROSION PROTECTION FOR STEEL PILES DETAIL.")

BAR TYPES

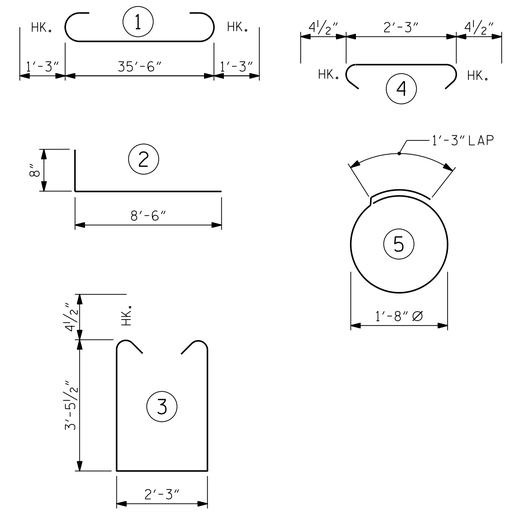

ALL BAR DIMENSIONS ARE OUT TO OUT.

END BENT No. 1	END BENT No. 2
HP 12 X 53 GALVANIZED STEEL PILES NO: 5 LIN. FT.= 360	HP 12 X 53 GALVANIZED STEEL PILES NO: 5 LIN. FT.= 360
PILE DRIVING EQUIPMENT SETUP FOR HP 12 X 53 GALVANIZED STEEL PILES NO: 5	PILE DRIVING EQUIPMENT SETUP FOR HP 12 X 53 GALVANIZED STEEL PILES NO: 5
PILE REDRIVES NO: 5	PILE REDRIVES NO: 5

BILL OF MATERIAL FOR ONE END BENT

BAR	NO.	SIZE	TYPE	LENGTH	WEIGHT
✱B1	8	#9	1	38'-0"	1034
✱B2	28	#4	STR	19'-0"	355
✱B3	9	#4	STR	2'-3"	14
✱D1	20	#6	STR	1'-6"	45
✱H1	40	#4	2	9'-2"	245
✱K1	16	#4	STR	2'-10"	30
✱S1	46	#4	3	9'-11"	305
✱S2	46	#4	4	3'-0"	92
✱S3	20	#4	5	6'-6"	87
✱V1	52	#4	STR	6'-3"	217

✱EPOXY COATED REINFORCING STEEL (FOR ONE END BENT) 2424 LBS.

CLASS AA CONCRETE BREAKDOWN (FOR ONE END BENT)

POUR #1 CAP, LOWER PART OF WINGS & COLLARS 17.9 C.Y.

POUR #2 UPPER PART OF WINGS 2.3 C.Y.

TOTAL CLASS AA CONCRETE 20.2 C.Y.

PROJECT NO. 44614
WASHINGTON COUNTY
STATION: 15+80.00 -L-

SHEET 4 OF 4

STATE OF NORTH CAROLINA
DEPARTMENT OF TRANSPORTATION
RALEIGH

SUBSTRUCTURE

END BENT No. 1 & 2 DETAILS

NORTH CAROLINA PROFESSIONAL SEAL 24939 ENGINEER BYRON E. ATKINSON
12/19/2017

DOCUMENT NOT CONSIDERED FINAL UNLESS ALL SIGNATURES COMPLETED

MI ENGINEERING
1011 SCHAUB DRIVE, SUITE 100
RALEIGH, NC 27606
(919) 851-6606
FIRM PE NUMBER : P-0671

REVISIONS						
NO.	BY:	DATE:	NO.	BY:	DATE:	
1			3			
2			4			

SHEET NO. S-11
TOTAL SHEETS 13

ASSEMBLED BY:	B.E. LANNING	DATE: 06/17
CHECKED BY :	B.E. ATKINSON	DATE: 06/17
DESIGN ENGINEER OF RECORD:	B.E. ATKINSON	DATE: 06/17
DRAWN BY :	WJH	12/11
CHECKED BY :	AAC	12/11

STD. NO. EB_30_90S4

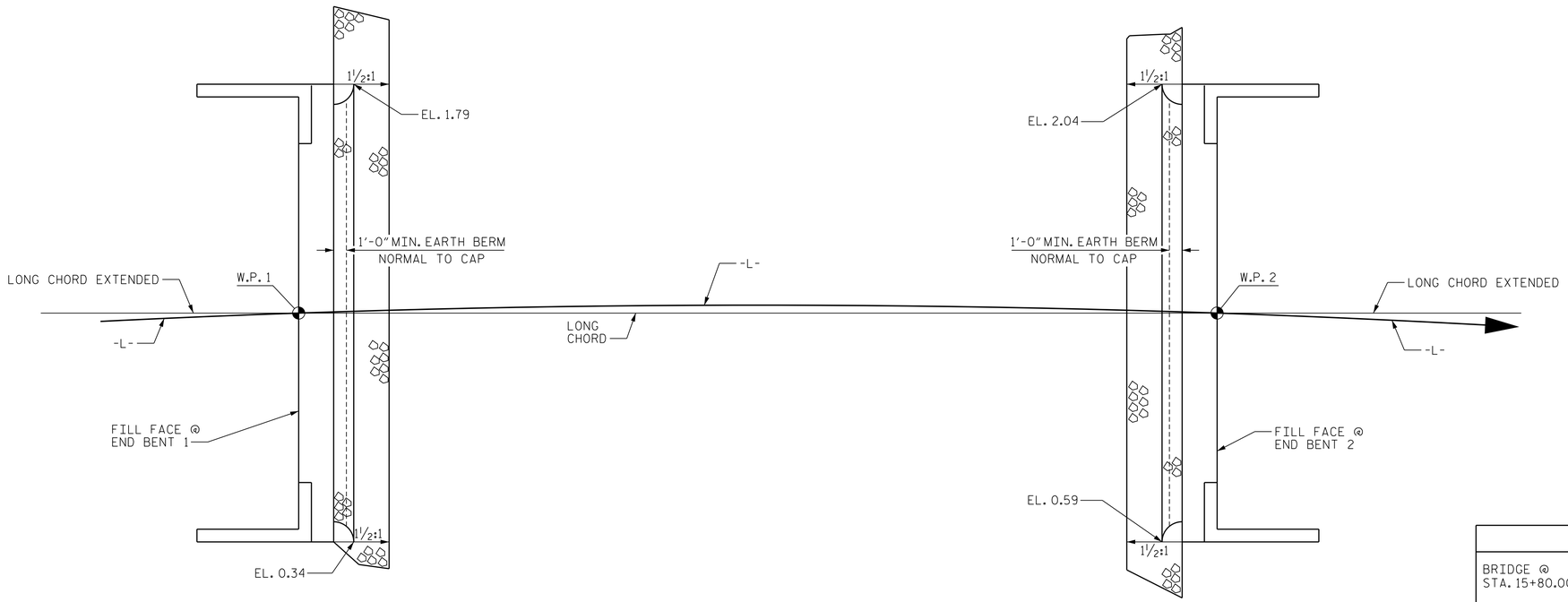

END BENT 1

END BENT 2

PLAN

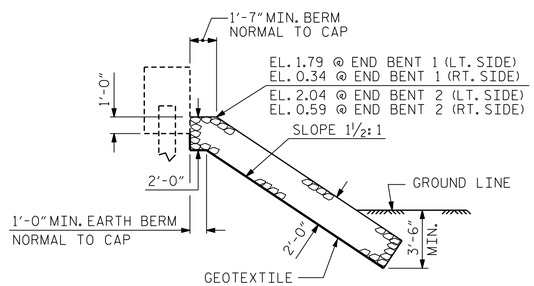

℄ SECTION

BERM RIP RAPPED

ESTIMATED QUANTITIES

BRIDGE @ STA. 15+80.00 -L-	RIP RAP CLASS II (2'-0" THICK)	GEOTEXTILE FOR DRAINAGE
	TONS	SQUARE YARDS
END BENT 1	22	24
END BENT 2	22	24

PROJECT NO. 44614

WASHINGTON COUNTY

STATION: 15+80.00 -L-

STATE OF NORTH CAROLINA
DEPARTMENT OF TRANSPORTATION
RALEIGH

RIP RAP DETAILS

NORTH CAROLINA PROFESSIONAL SEAL 24939 ENGINEER BYRON E. ATKINSON

12/19/2017

DOCUMENT NOT CONSIDERED FINAL UNLESS ALL SIGNATURES COMPLETED

MI ENGINEERING
1011 SCHAUB DRIVE, SUITE 100
RALEIGH, NC 27606
(919) 851-6606
FIRM PE NUMBER : P-0671

REVISIONS						
NO.	BY:	DATE:	NO.	BY:	DATE:	
1			3			
2			4			

SHEET NO. S-12

TOTAL SHEETS 13

DRAWN BY :	B.E. LANNING	DATE :	01/17
CHECKED BY :	B.E. ATKINSON	DATE :	02/17
DESIGN ENGINEER OF RECORD :	B.E. ATKINSON	DATE :	06/17

12/19/2017
2:30:55 PM
User:blanning
Filename: P:\NC Bridges\MI6003_VHB_Div.1 Br. Repl. (4 Bridges)\MI6003.01_Washington 26_SPN 44614\44614\Structures\401_023_44614_SMU_RR1.dgn

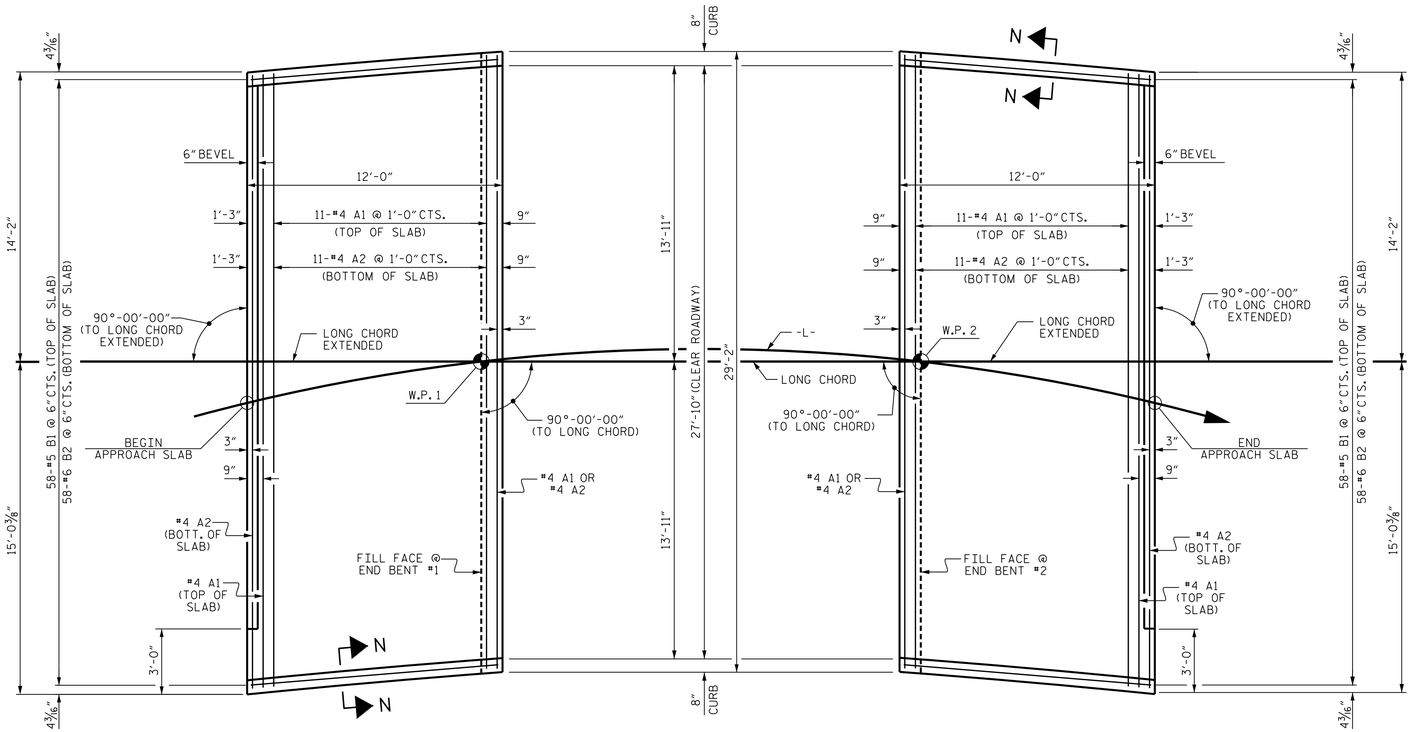

PLAN @ END BENT 1 PLAN @ END BENT 2

DIMENSIONS SHOWN ARE TYPICAL FOR BOTH APPROACH SLABS

NOTES

FOR BRIDGE APPROACH FILL INCLUDING GEOTEXTILE, 4" Ø DRAINAGE PIPE, AND SELECT MATERIAL BACKFILL, SEE ROADWAY PLANS.

GEOTEXTILE SHALL BE TYPE 1 IN ACCORDANCE WITH THE STANDARD SPECIFICATIONS SECTION 1056.

SELECT MATERIAL BACKFILL (CLASS V OR CLASS VI) SHALL BE IN ACCORDANCE WITH STANDARD SPECIFICATIONS SECTION 1016.

SELECT MATERIAL BACKFILL IS TO BE CONTINUOUS ALONG FILL FACE OF BACKWALL FROM OUTSIDE EDGE TO OUTSIDE EDGE OF APPROACH SLAB.

FOR THE 4" Ø DRAINAGE PIPE OUTLET(S), SEE ROADWAY STANDARD DRAWINGS.

AREA BETWEEN THE WINGWALL AND APPROACH SLAB SHALL BE GRADED TO DRAIN THE WATER AWAY FROM THE FILL FACE OF THE BRIDGE AND SHALL BE PAVED. SEE ROADWAY PLANS.

APPROACH SLAB GROOVING IS NOT REQUIRED.

BILL OF MATERIAL

APPROACH SLAB AT EB 1

BAR	NO.	SIZE	TYPE	LENGTH	WEIGHT
* A1	13	#4	STR	28'-10"	250
A2	13	#4	STR	28'-10"	250
* B1	58	#5	STR	11'-2"	676
B2	58	#6	STR	11'-8"	1016
REINFORCING STEEL				LBS.	1266
* EPOXY COATED REINFORCING STEEL				LBS.	926
CLASS AA CONCRETE				C. Y.	17.7

APPROACH SLAB AT EB 2

BAR	NO.	SIZE	TYPE	LENGTH	WEIGHT
* A1	13	#4	STR	28'-10"	250
A2	13	#4	STR	28'-10"	250
* B1	58	#5	STR	11'-2"	676
B2	58	#6	STR	11'-8"	1016
REINFORCING STEEL				LBS.	1266
* EPOXY COATED REINFORCING STEEL				LBS.	926
CLASS AA CONCRETE				C. Y.	17.7

SPLICE LENGTHS

BAR SIZE	EPOXY COATED	UNCOATED
#4	2'-0"	1'-9"
#5	2'-6"	2'-2"
#6	3'-10"	2'-7"

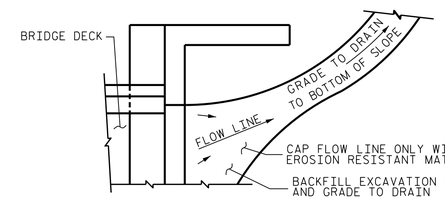

NOTE: IF THE APPROACH SLAB IS NOT CONSTRUCTED IMMEDIATELY AFTER THE BACKFILLING OF THE END BENT EXCAVATION, GRADE TO DRAIN TO THE BOTTOM OF THE SLOPE AND PROVIDE EROSION RESISTANT MATERIAL, SUCH AS FIBERGLASS ROVING OR AS DIRECTED BY THE ENGINEER TO PREVENT SOIL EROSION AND TO PROTECT THE AREA ADJACENT TO THE STRUCTURE. THE CONTRACTOR WILL BE REQUIRED TO REMOVE THESE MATERIALS PRIOR TO CONSTRUCTION OF THE APPROACH SLAB.

TEMPORARY DRAINAGE DETAIL

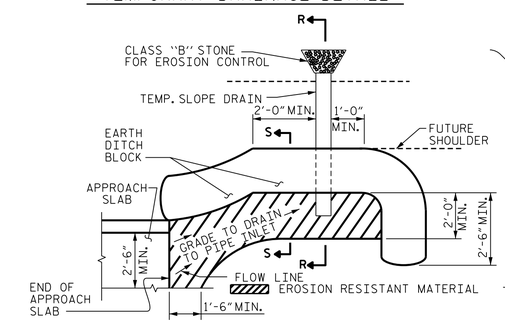

NOTE: IMMEDIATELY AFTER THE CONSTRUCTION OF THE APPROACH SLAB, THE CONTRACTOR SHALL PROVIDE TEMPORARY BERM AND SLOPE DRAIN. CONTRACTOR SHALL GRADE TO PIPE INLET AND PROVIDE EROSION RESISTANT MATERIAL AS SHOWN. THE EROSION RESISTANT MATERIAL SHALL BE EITHER 1) ASPHALT PLANT MIX, TYPE 1 OR TYPE 2, MIN. 2" DEPTH, 2) EROSION CONTROL MAT, OR 3) CONCRETE, AS DIRECTED BY THE ENGINEER. THE SLOPE DRAIN SHALL CONSIST OF A NON-PERFORATED TEMPORARY DRAINAGE PIPE, 12 INCHES IN DIAMETER.

PLAN VIEW

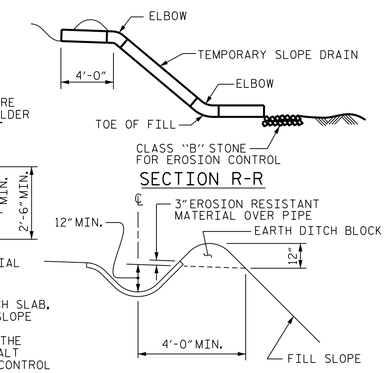

SECTION S-S

TEMPORARY BERM AND SLOPE DRAIN DETAILS

(TO BE USED WHEN SHOULDER BERM GUTTER IS REQUIRED)

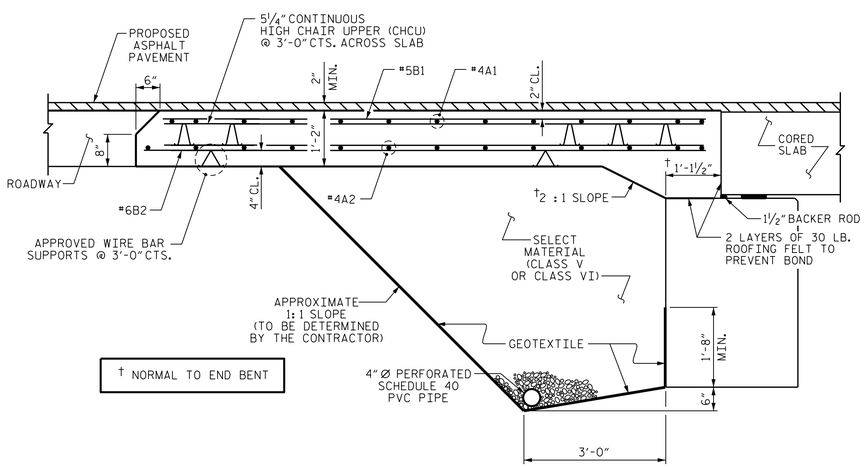

† NORMAL TO END BENT

SECTION THRU SLAB

(TYPE II - MODIFIED APPROACH FILL)

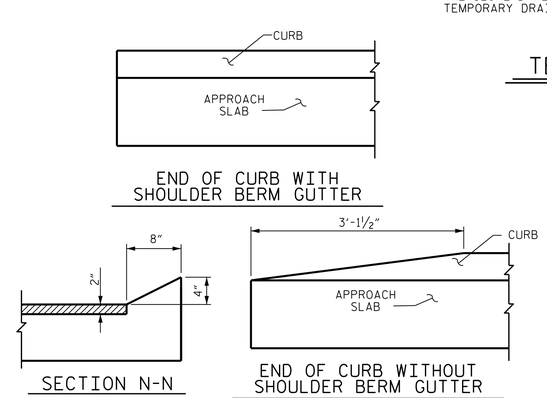

CURB DETAILS

PROJECT NO. 44614

WASHINGTON COUNTY

STATION: 15+80.00 -L-

NORTH CAROLINA PROFESSIONAL SEAL 24939 ENGINEER BYRON E. ATKINSON

12/19/2017

DOCUMENT NOT CONSIDERED FINAL UNLESS ALL SIGNATURES COMPLETED

MI ENGINEERING
1011 SCHAUB DRIVE, SUITE 100
RALEIGH, NC 27606
(919) 851-6606
FIRM PE NUMBER : P-0671

STATE OF NORTH CAROLINA
DEPARTMENT OF TRANSPORTATION
RALEIGH

STANDARD
BRIDGE APPROACH SLAB
FOR PRESTRESSED CONCRETE
CORED SLAB UNIT
(SUB-REGIONAL TIER)
90° SKEW

REVISIONS								SHEET NO.
NO.	BY:	DATE:	NO.	BY:	DATE:			S-13
1			3					TOTAL SHEETS
2			4					13

ASSEMBLED BY: B.E. LANNING	DATE: 12/17	
CHECKED BY : B.E. ATKINSON	DATE: 12/17	
DESIGN ENGINEER OF RECORD: B.E. ATKINSON	DATE: 12/17	
DRAWN BY : SHS/MAA 5-09	REV. 12-17	MAA/THC
CHECKED BY : BCH 5-09		

STD. NO. BAS_30_90S

12/19/2017
2:30:57 PM
User: blanning
Filename: P:\NC Bridges\M16003_VHB_Div. 1 Br. Repl. (4 Bridges)\M16003.01_Washington 26_SPN 44614\44614\Structures\401_025_44614_SMU_BAS1.dgn

STANDARD NOTES

DESIGN DATA:

SPECIFICATIONS	A.A.S.H.T.O. (CURRENT)
LIVE LOAD	SEE PLANS
IMPACT ALLOWANCE	SEE A.A.S.H.T.O.
STRESS IN EXTREME FIBER OF STRUCTURAL STEEL - AASHTO M270 GRADE 36	20,000 LBS. PER SQ. IN.
- AASHTO M270 GRADE 50W	27,000 LBS. PER SQ. IN.
- AASHTO M270 GRADE 50	27,000 LBS. PER SQ. IN.
REINFORCING STEEL IN TENSION - GRADE 60	24,000 LBS. PER SQ. IN.
CONCRETE IN COMPRESSION	1,200 LBS. PER SQ. IN.
CONCRETE IN SHEAR	SEE A.A.S.H.T.O.
STRUCTURAL TIMBER - TREATED OR UNTREATED EXTREME FIBER STRESS	1,800 LBS. PER SQ. IN.
COMPRESSION PERPENDICULAR TO GRAIN OF TIMBER	375 LBS. PER SQ. IN.
EQUIVALENT FLUID PRESSURE OF EARTH	30 LBS. PER CU. FT. (MINIMUM)

MATERIAL AND WORKMANSHIP:

EXCEPT AS MAY OTHERWISE BE SPECIFIED ON PLANS OR IN THE SPECIAL PROVISIONS, ALL MATERIAL AND WORKMANSHIP SHALL BE IN ACCORDANCE WITH THE 2018 "STANDARD SPECIFICATIONS FOR ROADS AND STRUCTURES" OF THE N.C. DEPARTMENT OF TRANSPORTATION.

STEEL SHEET PILING FOR PERMANENT OR TEMPORARY APPLICATIONS SHALL BE HOT ROLLED.

CONCRETE:

UNLESS OTHERWISE REQUIRED ON PLANS, CLASS A CONCRETE SHALL BE USED FOR ALL PORTIONS OF ALL STRUCTURES WITH THE EXCEPTION THAT: CLASS AA CONCRETE SHALL BE USED IN BRIDGE SUPERSTRUCTURES, ABUTMENT BACKWALLS, AND APPROACH SLABS; AND CLASS B CONCRETE SHALL BE USED FOR SLOPE PROTECTION AND RIP RAP.

CONCRETE CHAMFERS:

UNLESS OTHERWISE NOTED ON THE PLANS, ALL EXPOSED CORNERS ON STRUCTURES SHALL BE CHAMFERED 3/4" WITH THE FOLLOWING EXCEPTIONS: TOP CORNERS OF CURBS MAY BE ROUNDED TO 1 1/2" RADIUS WHICH IS BUILT INTO CURB FORMS; CORNERS OF TRANSVERSE FLOOR EXPANSION JOINTS SHALL BE ROUNDED WITH A 1/4" FINISHING TOOL UNLESS OTHERWISE REQUIRED ON PLANS; AND CORNERS OF EXPANSION JOINTS IN THE ROADWAY FACES AND TOPS OF CURBS AND SIDEWALKS SHALL BE ROUNDED TO A 1/4" RADIUS WITH A FINISHING STONE OR TOOL UNLESS OTHERWISE REQUIRED ON PLANS.

DOWELS:

DOWELS WHEN INDICATED ON PLANS AS FOR CULVERT EXTENSIONS, SHALL BE EMBEDDED AT LEAST 12" INTO THE OLD CONCRETE AND GROUTED INTO PLACE WITH 1:2 CEMENT MORTAR.

ALLOWANCE FOR DEAD LOAD DEFLECTION, SETTLEMENT, ETC. IN CASTING SUPERSTRUCTURES:

BRIDGES SHALL BE BUILT ON THE GRADE OR VERTICAL CURVE SHOWN ON PLANS. SLABS, CURBS AND PARAPETS SHALL CONFORM TO THE GRADE OR CURVE.

ALL DIMENSIONS WHICH ARE GIVEN IN SECTION AND ARE AFFECTED BY DEAD LOAD DEFLECTIONS ARE DIMENSIONS AT CENTER LINE OF BEARING UNLESS OTHERWISE NOTED ON PLANS. IN SETTING FORMS FOR STEEL BEAM BRIDGES AND PRESTRESSED CONCRETE GIRDER BRIDGES, ADJUSTMENTS SHALL BE MADE DUE TO THE DEAD LOAD DEFLECTIONS FOR THE ELEVATIONS SHOWN. WHERE BLOCKS ARE SHOWN OVER BEAMS FOR BUILDING UP TO THE SLAB, THE VERTICAL DIMENSIONS OF THE BLOCKS SHALL BE ADJUSTED BETWEEN BEARINGS TO COMPENSATE FOR DEAD LOAD DEFLECTIONS, VERTICAL CURVE ORDINATE, AND ACTUAL BEAM CAMBER. WHERE BOTTOM OF SLAB IS IN LINE WITH BOTTOM OF TOP FLANGES, DEPTH OF SLAB BETWEEN BEARINGS SHALL BE ADJUSTED TO COMPENSATE FOR DEAD LOAD DEFLECTION, VERTICAL CURVE ORDINATE, AND ACTUAL BEAM CAMBER.

IN SETTING FALSEWORK AND FORMS FOR REINFORCED CONCRETE SPANS, AN ALLOWANCE SHALL BE MADE FOR DEAD LOAD DEFLECTIONS, SETTLEMENT OF FALSEWORK, AND PERMANENT CAMBER WHICH SHALL BE PROVIDED FOR IN ADDITION TO THE ELEVATIONS SHOWN. AFTER REMOVAL OF THE FALSEWORK, THE FINISHED STRUCTURES SHALL CONFORM TO THE PROFILE AND ELEVATIONS SHOWN ON THE PLANS AND CONSTRUCTION ELEVATIONS FURNISHED BY THE ENGINEER.

DETAILED DRAWINGS FOR FALSEWORK OR FORMS FOR BRIDGE SUPERSTRUCTURE AND ANY STRUCTURE OR PARTS OF A STRUCTURE AS NOTED ON THE PLANS SHALL BE SUBMITTED TO THE ENGINEER FOR APPROVAL BEFORE CONSTRUCTION OF THE FALSEWORK OR FORMS IS STARTED.

REINFORCING STEEL:

ALL REINFORCING STEEL SHALL BE DEFORMED. DIMENSIONS RELATIVE TO PLACEMENT OF REINFORCING ARE TO CENTERS OF BARS UNLESS OTHERWISE INDICATED IN THE PLANS. DIMENSIONS ON BAR DETAILS ARE TO CENTERS OF BARS OR ARE OUT TO OUT AS INDICATED ON PLANS.

WIRE BAR SUPPORTS SHALL BE PROVIDED FOR REINFORCING STEEL WHERE INDICATED ON THE PLANS. WHEN BAR SUPPORT PIECES ARE PLACED IN CONTINUOUS LINES, THEY SHALL BE SO PLACED THAT THE ENDS OF THE SUPPORTING WIRES SHALL BE LAPPED TO LOCK LEGS ON ADJOINING PIECES.

STRUCTURAL STEEL:

AT THE CONTRACTOR'S OPTION, HE MAY SUBSTITUTE 7/8" Ø SHEAR STUDS FOR THE 3/4" Ø STUDS SPECIFIED ON THE PLANS. THIS SUBSTITUTION SHALL BE MADE AT THE RATE OF 3 - 7/8" Ø STUDS FOR 4 - 3/4" Ø STUDS, AND STUD SPACING CHANGES SHALL BE MADE AS NECESSARY TO PROVIDE THE SAME EQUIVALENT NUMBER OF 7/8" Ø STUDS ALONG THE BEAM AS SHOWN FOR 3/4" Ø STUDS BASED ON THE RATIO OF 3 - 7/8" Ø STUDS FOR 4 - 3/4" Ø STUDS. STUDS OF THE LENGTH SPECIFIED ON THE PLANS MUST BE PROVIDED. THE MAXIMUM SPACING SHALL BE 2'-0".

EXCEPT AT THE INTERIOR SUPPORTS OF CONTINUOUS BEAMS WHERE THE COVER PLATE IS IN CONTACT WITH BEARING PLATE, THE CONTRACTOR MAY, AT HIS OPTION, SUBSTITUTE FOR THE COVER PLATES DESIGNATED ON THE PLANS COVER PLATES OF THE EQUIVALENT AREA PROVIDED THESE PLATES ARE AT LEAST 5/16" IN THICKNESS AND DO NOT EXCEED A WIDTH EQUAL TO THE FLANGE WIDTH LESS 2" OR A THICKNESS EQUAL TO 2 TIMES THE FLANGE THICKNESS. THE SIZE OF FILLET WELDS SHALL CONFORM TO THE REQUIREMENTS OF THE CURRENT ANSI/AASHTO/AWS "BRIDGE WELDING CODE". ELECTROSLAG WELDING WILL NOT BE PERMITTED.

WITH THE SOLE EXCEPTION OF EDGES AT SURFACES WHICH BEAR ON OTHER SURFACES, ALL SHARP EDGES AND ENDS OF SHAPES AND PLATES SHALL BE SLIGHTLY ROUNDED BY SUITABLE MEANS TO A RADIUS OF APPROXIMATELY 1/16 INCH OR EQUIVALENT FLAT SURFACE AT A SUITABLE ANGLE PRIOR TO PAINTING, GALVANIZING, OR METALLIZING.

HANDRAILS AND POSTS:

METAL STANDARDS AND FACES OF THE CONCRETE END POSTS FOR THE METAL RAIL SHALL BE SET NORMAL TO THE GRADE OF THE CURB, UNLESS OTHERWISE SHOWN ON PLANS. THE METAL RAIL AND TOPS OF CONCRETE POSTS USED WITH THE ALUMINUM RAIL SHALL BE BUILT PARALLEL TO THE GRADE OF THE CURB.

METAL HANDRAILS SHALL BE IN ACCORDANCE WITH THE PLANS. RAILS SHALL BE AS MANUFACTURED FOR BRIDGE RAILING. CASTINGS SHALL BE OF A UNIFORM APPEARANCE. FINS AND OTHER DEFORMATIONS RESULTING FROM CASTING OR OTHERWISE SHALL BE REMOVED IN A MANNER SO THAT A UNIFORM COLORING OF THE COMPLETED CASTING SHALL BE OBTAINED. CASTINGS WITH DISCOLORATIONS OR OF NON-UNIFORM COLORING WILL NOT BE ACCEPTED. CERTIFIED MILL REPORTS ARE REQUIRED FOR METAL RAILS AND POSTS.

SPECIAL NOTES:

GENERALLY, IN CASE OF DISCREPANCY, THIS STANDARD SHEET OF NOTES SHALL GOVERN OVER THE SPECIFICATIONS, BUT THE REMAINDER OF THE PLANS SHALL GOVERN OVER NOTES HEREON, AND SPECIAL PROVISIONS SHALL GOVERN OVER ALL. SEE SPECIFICATIONS ARTICLE 105-4.

ENGLISH

JANUARY, 1990